LTX7500M-F10-SSI2-GAF1-X3-H1161
Pressure-Resistant Linear Position Sensor – SSI

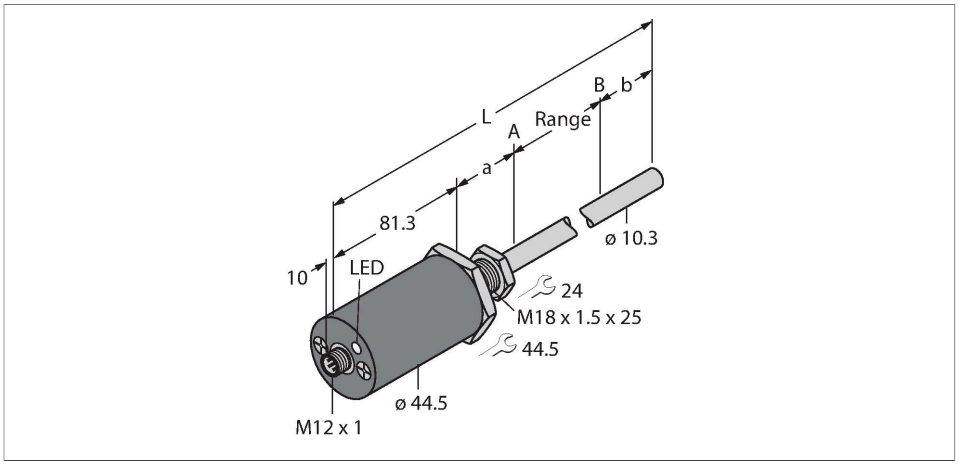

Technical data

Type	LTX7500M-F10-SSI2-GAF1-X3-H1161
Ident. no.	1540274
Remark to product	Please note housing design on page 2
Measuring principle	Magnetostrictive
Measuring range	7500 mm
Resolution	0,005 mm
Blind zone a	50.8 mm
Blind zone b	63.5 mm
Repeat accuracy	≤ 0.01 % of full scale
Linearity deviation	≤ 0.01 %f.s.
Hysteresis	≤ 0.025 mm
Ambient temperature	-40…+85 °C
Operating voltage	7…30 VDC
Residual ripple	≤ 10 % U_{ss}
Short-circuit protection	yes / Cyclic
Wire breakage/Reverse polarity protection	yes (voltage supply)
Communication protocol	SSi
Output function	6-pin, 25 Bit, Gray, asynchronous, Forward
Current consumption	< 60 mA at 24 VDC
Design	Rod
Dimensions	7695.6 mm
Housing material	Metal, AL
Active area material	Stainless steel, 1.4404 (AISI 316L)
Electrical connection	Connector, M12 × 1

Features

- Suited for hydraulic cylinders
- The sensor is pressure resistant up to 340 bar (permanent), 680 bar (short-term)
- Shock-proof up to 100g
- Status displayed via 3 color LED
- Resolution 0,005 mm
- Operating temperature rod -40 °C…+105 °C
- Operating temperature electronics -40 °C… +85 °C
- Protection class IP68
- 7…30 V DC power supply
- SSI - output, gray coded, 25 bit
- M12 x 1 connector

Wiring diagram

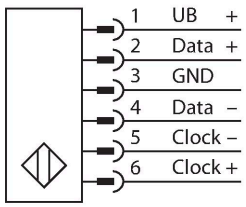

Functional principle

The LTX is a magnetostrictive sensor, optimized for precise position control in hydraulic cylinders. With the assistance of optional floats, the magnetically actuated position sensors also implement additional fill level monitoring.
The absolute value sensor is very robust and precise, and also saves the position information in the event of a voltage failure, so that additional zeroing is unnecessary. The sensors operate on the contactless function principle and are thus wear and maintenance free.

LTX7500M-F10-SSI2-GAF1-X3-H1161| 09/09/2020 16-53 | technical changes reserved

Technical data

Vibration resistance	30 Hz (1 mm)
Shock resistance	100 g (11 ms)
Protection class	IP68
Measuring range display	multifunction LED

Mounting instructions

Mounting instructions/Description

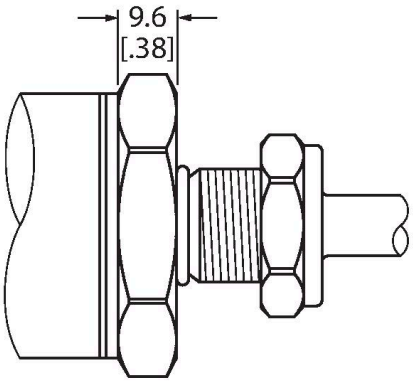

Flat Face Design

This sensor comes in flat face design (see drawing).

To fasten the sensor, the end cap of the hydraulic cylinder must have an M18 × 1.5 threaded bore according to ISO 6149-1. For more information, refer to the operating instructions.

Accessories

CM-R10 6900416

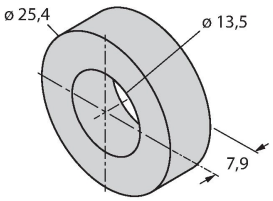

Standard positioning element, suitable for mounting in hydraulic cylinders

STM-AL-R10 6900409

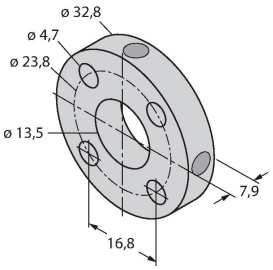

Standard 4-hole positioning element, material: Aluminum

LSPM-AL-R10 6900414

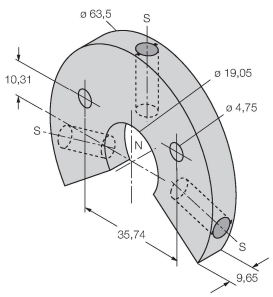

Ring-type positioning element with slot, can be used for external mounting with mounting bracket RB-R10, material: Aluminum

EF-R10 6900417

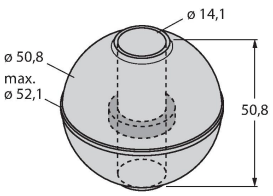

Float-type positioning element, specific weight 0.62 kg/m³, suitable for external mounting for level monitoring, material: Stainless steel

LTX7500M-F10-SSI2-GAF1-X3-H1161| 09/09/2020 16-53 | technical changes reserved

STS-R10	6900411

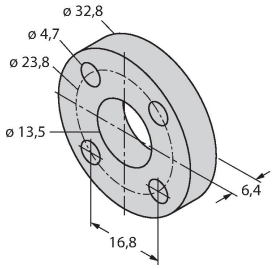

Standard spacer made of non-ferrous material for separating the positioning element from the base of the hydraulic piston rod

MB-R10	6900419

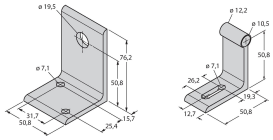

Mounting bracket for sensor head and rod, for external mounting

RB-R10	6900420

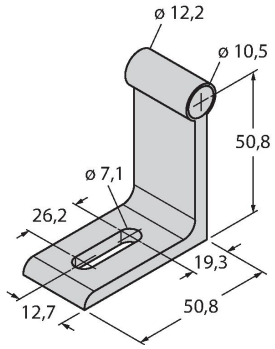

Mounting bracket for sensor head and rod, for external mounting

MMB-R10	6900004

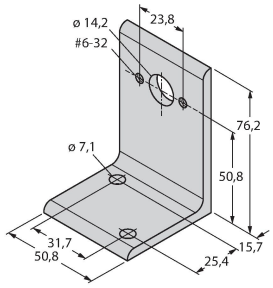

Mounting bracket for positioning element, for external mounting

LTX7500M-F10-SSI2-GAF1-X3-H1161| 09/09/2020 16-53 | technical changes reserved