LTX500M-F10-LI0-X3-H1151
Pressure-Resistant Linear Position Sensor – Analog

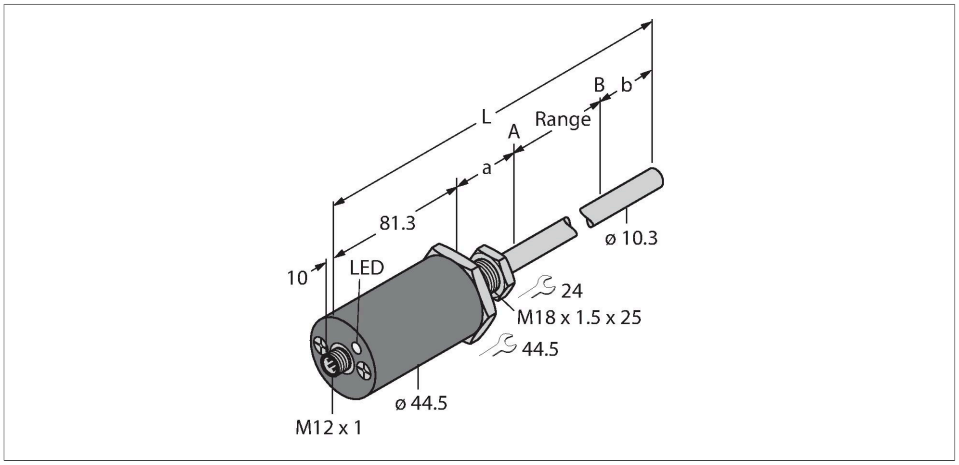

Technical data

Type	LTX500M-F10-LI0-X3-H1151
Ident. no.	1540291
Remark to product	Please note housing design on page 2
Measuring principle	Magnetostrictive
Measuring range	500 mm
Resolution	16 bit
Blind zone a	50.8 mm
Blind zone b	63.5 mm
Repeat accuracy	≤ 0.01 % of full scale
Linearity deviation	≤ 0.01 %f.s.
Hysteresis	≤ 0.025 mm
Ambient temperature	-40…+85 °C
Operating voltage	7…30 VDC
Residual ripple	≤ 10 % U_{ss}
Short-circuit protection	yes / Cyclic
Wire breakage/Reverse polarity protection	yes (voltage supply)
Output function	5-pin, Analog output, Differential or common ground (see manual)
Current output	4…20 mA
Load resistance, current output	≤ 0.5 kΩ
Current consumption	< 60 mA at 24 VDC
Design	Rod
Dimensions	695.6 mm
Housing material	Metal, AL

Features

- Suited for hydraulic cylinders
- The sensor is pressure resistant up to 340 bar (permanent), 680 bar (short-term)
- Shock-proof up to 100g
- Status displayed via 3 color LED
- 16-bit resolution
- Adjustable measuring range
- Operating temperature rod -40 °C…+105 °C
- Operating temperature electronics -40 °C… +85 °C
- Protection class IP68
- 7…30 VDC supply voltage
- Analog output 4…20 mA
- M12 × 1 connector

Wiring diagram

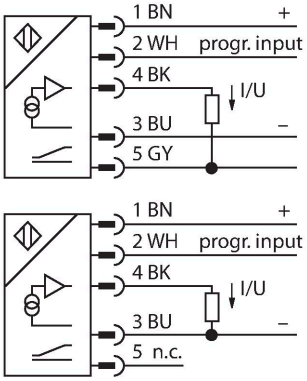

Functional principle

The LTX is a magnetostrictive sensor, optimized for precise position control in hydraulic cylinders. With the assistance of optional floats, the magnetically actuated position sensors also implement additional fill level monitoring. The absolute value sensor is very robust and precise, and also saves the position information in the event of a voltage failure, so that additional zeroing is unnecessary. The sensors operate on the contactless function principle and are thus wear and maintenance free.

LTX500M-F10-LI0-X3-H1151| 09/09/2020 16-54 | technical changes reserved

Technical data

Active area material	Stainless steel, 1.4404 (AISI 316L)
Electrical connection	Connector, M12 × 1
Vibration resistance	30 Hz (1 mm)
Shock resistance	100 g (11 ms)
Protection class	IP68
Measuring range display	multifunction LED

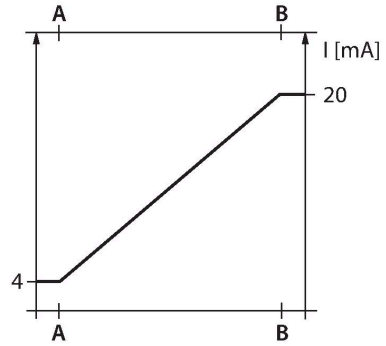

Mounting instructions

Mounting instructions/Description

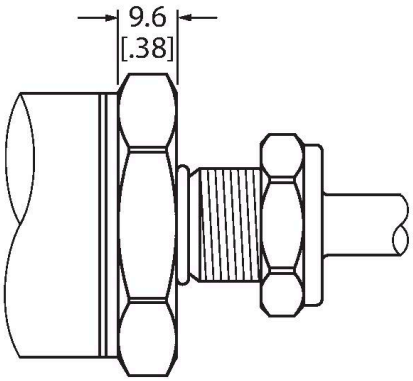

Flat Face Design

This sensor comes in flat face design (see drawing).

To fasten the sensor, the end cap of the hydraulic cylinder must have an M18 × 1.5 threaded bore according to ISO 6149-1. For more information, refer to the operating instructions.

Accessories

CM-R10 6900416

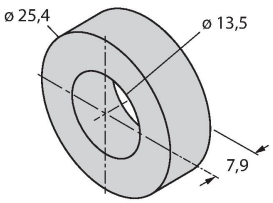

Standard positioning element, suitable for mounting in hydraulic cylinders

STM-AL-R10 6900409

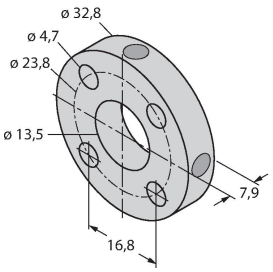

Standard 4-hole positioning element, material: Aluminum

LTX500M-F10-LI0-X3-H1151| 09/09/2020 16-54 | technical changes reserved

LSPM-AL-R10 — 6900414

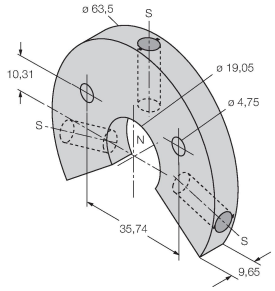

Ring-type positioning element with slot, can be used for external mounting with mounting bracket RB-R10, material: Aluminum

EF-R10 — 6900417

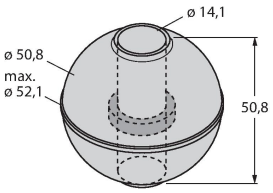

Float-type positioning element, specific weight 0.62 kg/m³, suitable for external mounting for level monitoring, material: Stainless steel

STS-R10 — 6900411

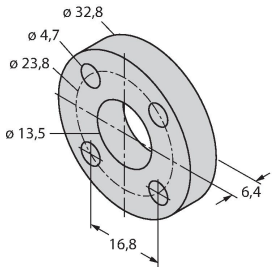

Standard spacer made of non-ferrous material for separating the positioning element from the base of the hydraulic piston rod

MB-R10 — 6900419

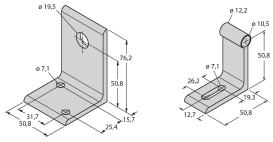

Mounting bracket for sensor head and rod, for external mounting

RB-R10 — 6900420

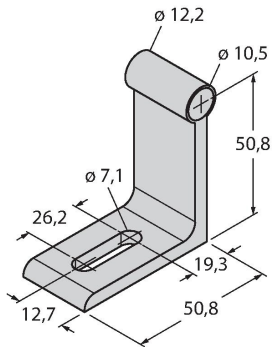

Mounting bracket for sensor head and rod, for external mounting

MMB-R10 — 6900004

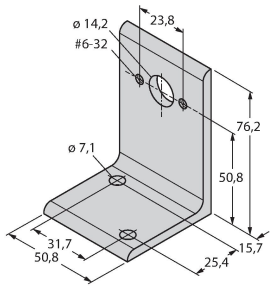

Mounting bracket for positioning element, for external mounting

RP-Q21 — 6900005

Kein Maßbild vorhanden/
No dimension drawing available

Teach adapter to adjust the measuring range

LTX500M-F10-LI0-X3-H1151| 09/09/2020 16-54 | technical changes reserved