# LTX800M-F10-LI0-X3-H1151
# Pressure-Resistant Linear Position Sensor – Analog

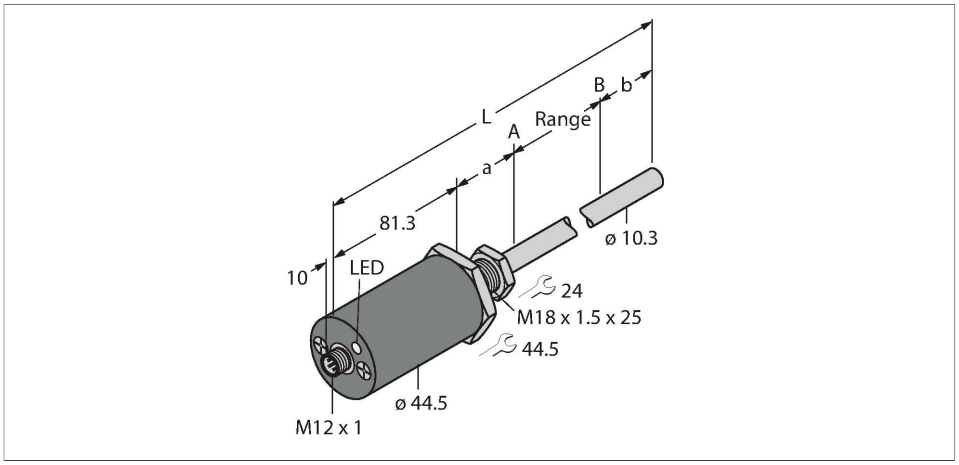


## Technical data

| | |
|---|---|
| Type | LTX800M-F10-LI0-X3-H1151 |
| Ident. no. | 1540297 |
| Remark to product | Please note housing design on page 2 |
| **Measuring principle** | Magnetostrictive |
| Measuring range | 800 mm |
| Resolution | 16 bit |
| Blind zone a | 50.8 mm |
| Blind zone b | 63.5 mm |
| Repeat accuracy | ≤ 0.01 % of full scale |
| Linearity deviation | ≤ 0.01 %f.s. |
| Hysteresis | ≤ 0.025 mm |
| Ambient temperature | -40…+85 °C |
| Operating voltage | 7…30 VDC |
| Residual ripple | ≤ 10 % $U_{ss}$ |
| Short-circuit protection | yes / Cyclic |
| Wire breakage/Reverse polarity protection | yes (voltage supply) |
| Output function | 5-pin, Analog output, Differential or common ground (see manual) |
| Current output | 4…20 mA |
| Load resistance, current output | ≤ 0.5 kΩ |
| Current consumption | < 60 mA at 24 VDC |
| **Design** | Rod |
| Dimensions | 995.6 mm |
| Housing material | Metal, AL |

## Features

- Suited for hydraulic cylinders
- The sensor is pressure resistant up to 340 bar (permanent), 680 bar (short-term)
- Shock-proof up to 100g
- Status displayed via 3 color LED
- 16-bit resolution
- Adjustable measuring range
- Operating temperature rod -40 °C…+105 °C
- Operating temperature electronics -40 °C… +85 °C
- Protection class IP68
- 7…30 VDC supply voltage
- Analog output 4…20 mA
- M12 × 1 connector

## Wiring diagram

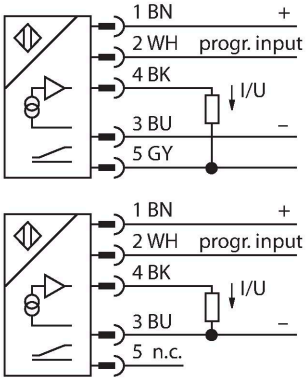


## Functional principle

The LTX is a magnetostrictive sensor, optimized for precise position control in hydraulic cylinders. With the assistance of optional floats, the magnetically actuated position sensors also implement additional fill level monitoring. The absolute value sensor is very robust and precise, and also saves the position information in the event of a voltage failure, so that additional zeroing is unnecessary. The sensors operate on the contactless function principle and are thus wear and maintenance free.

LTX800M-F10-LI0-X3-H1151| 09/09/2020 16-55 | technical changes reserved

## Technical data

| | |
|---|---|
| Active area material | Stainless steel, 1.4404 (AISI 316L) |
| Electrical connection | Connector, M12 × 1 |
| Vibration resistance | 30 Hz (1 mm) |
| Shock resistance | 100 g (11 ms) |
| Protection class | IP68 |
| Measuring range display | multifunction LED |

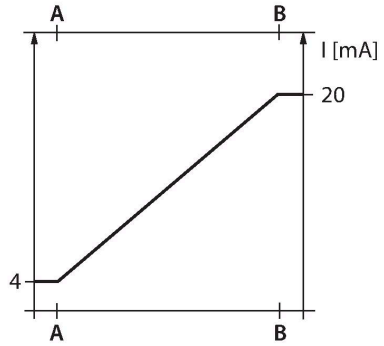


## Mounting instructions

Mounting instructions/Description

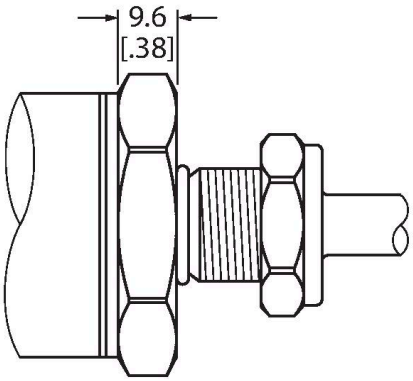


Flat Face Design

This sensor comes in flat face design (see drawing).

To fasten the sensor, the end cap of the hydraulic cylinder must have an M18 × 1.5 threaded bore according to ISO 6149-1. For more information, refer to the operating instructions.

## Accessories

CM-R10 6900416

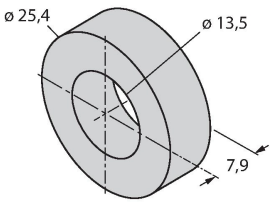


Standard positioning element, suitable for mounting in hydraulic cylinders

STM-AL-R10 6900409

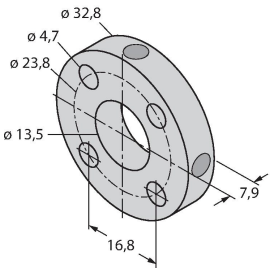


Standard 4-hole positioning element, material: Aluminum

LTX800M-F10-LI0-X3-H1151| 09/09/2020 16-55 | technical changes reserved

| LSPM-AL-R10 | 6900414 |
|---|---|

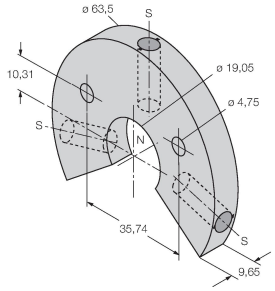


Ring-type positioning element with slot, can be used for external mounting with mounting bracket RB-R10, material: Aluminum

| EF-R10 | 6900417 |
|---|---|

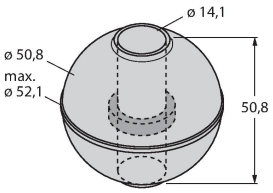


Float-type positioning element, specific weight 0.62 kg/m³, suitable for external mounting for level monitoring, material: Stainless steel

| STS-R10 | 6900411 |
|---|---|

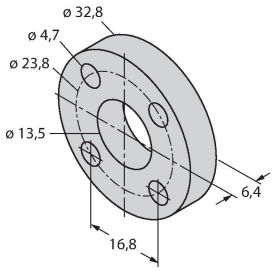


Standard spacer made of non-ferrous material for separating the positioning element from the base of the hydraulic piston rod

| MB-R10 | 6900419 |
|---|---|

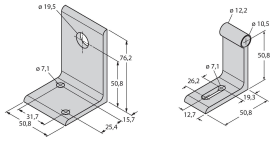

Mounting bracket for sensor head and rod, for external mounting

| RB-R10 | 6900420 |
|---|---|

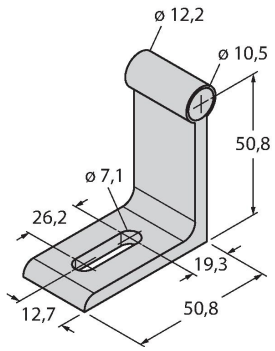


Mounting bracket for sensor head and rod, for external mounting

| MMB-R10 | 6900004 |
|---|---|

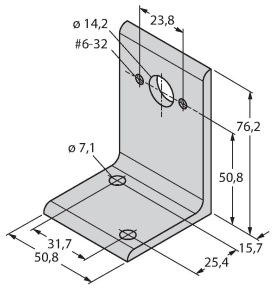


Mounting bracket for positioning element, for external mounting

| RP-Q21 | 6900005 |
|---|---|

Kein Maßbild vorhanden/
No dimension drawing available

Teach adapter to adjust the measuring range

LTX800M-F10-LI0-X3-H1151| 09/09/2020 16-55 | technical changes reserved