DW15000-135-PA-H1441
Draw-Wire

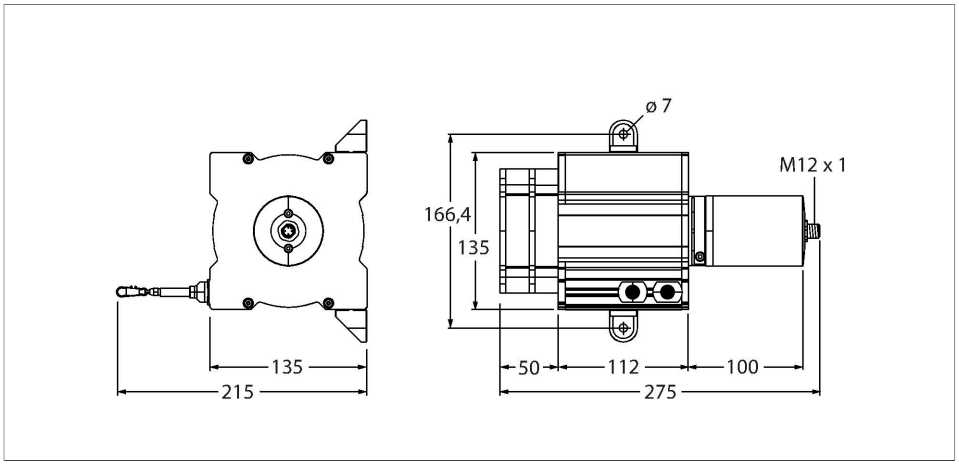

Features

- Measuring range up to 15000mm
- M12 connector
- Protection class: IP65 (Encoder)
- Potentiometric output 1k Ohm
- Supply voltage max. 30 VDC

Wiring diagram

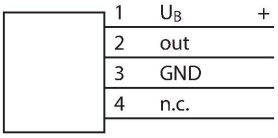

Technical data

Type	DW15000-135-PA-H1441
Ident. no.	1544560
Measuring range	15000 mm
Linearity deviation	≤ 0.1 %
Ambient temperature	-20…+85 °C
Operating voltage	0…30 VDC
Short-circuit protection	yes
Wire breakage/Reverse polarity protection	yes
Output function	4-pin, Potentiometer
Design	Draw Wire
Housing material	Titanium anodized aluminium
min. extension force	8.7 N
max.extension force	16.9 N
max. extension speed	6 m/s
Pull acceleration max.	80 m/s²
wire material	Stainless steel
Electrical connection	Connector, M12 × 1
Protection class	IP65

Signal	$+U_B$	Slider	Gnd	-	-	-	-	-	-
Pin configuration	1	2	3	4	-	-	-	-	-

DW15000-135-PA-H1441| 09/09/2020 16-48 | technical changes reserved

Accessories

RDR-1	1544753
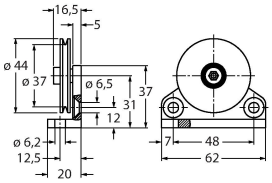	Deflection roller for aluminium draw-wire sensors

DW15000-135-PA-H1441| 09/09/2020 16-48 | technical changes reserved