DW20000-135-7E-H1441
Draw-Wire

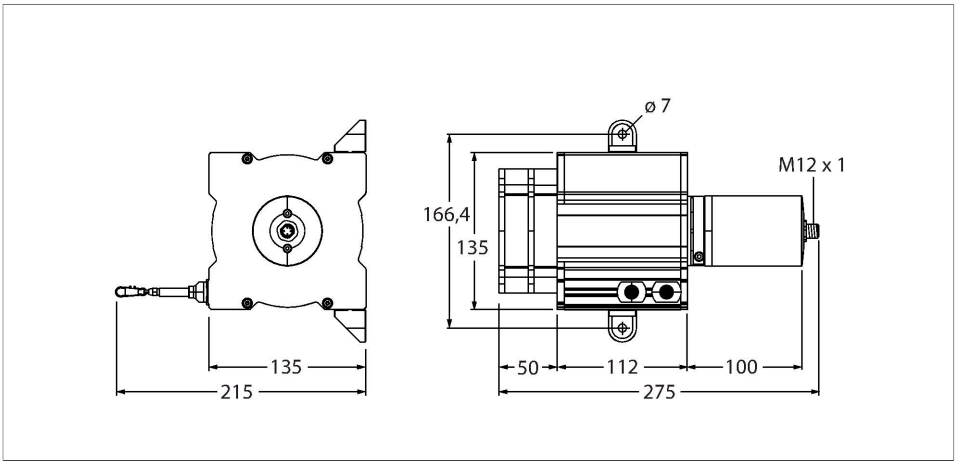

Features

- Measuring range up to 20000mm
- M12 connector
- Protection class: IP65 (Encoder)
- Analog output, 4…20 mA
- Supply voltage 12…30 VDC

Wiring diagram

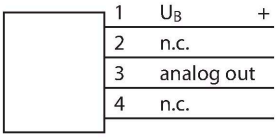

Technical data

Type	DW20000-135-7E-H1441
Ident. no.	1544561
Remark to product	Turck description modified: previously DW…-H1141
Measuring range	20000 mm
Linearity deviation	≤ 0.1 %
Ambient temperature	-20…+60 °C
Operating voltage	12…30 VDC
Short-circuit protection	yes
Wire breakage/Reverse polarity protection	yes
Output function	4-pin, Analog output
Current output	4…20 mA
Design	Draw Wire
Housing material	Titanium anodized aluminium
min. extension force	7 N
max.extension force	12.4 N
max. extension speed	5 m/s
Pull acceleration max.	60 m/s^2
wire material	Stainless steel
Electrical connection	Connector, M12 × 1
Protection class	IP65

DW20000-135-7E-H1441| 09/09/2020 16-48 | technical changes reserved

Signal	$+U_B$	-	Analog out	-	-	-	-	-	-
Pin configuration	1	2	3	4	-	-	-	-	-

Accessories

RDR-1	1544753
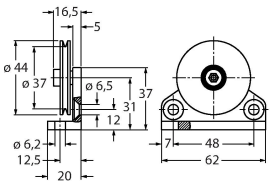	Deflection roller for aluminium draw-wire sensors

DW20000-135-7E-H1441| 09/09/2020 16-48 | technical changes reserved