NI35-CP40-VP4X2/S369-F 30M
Inductive Sensor – For Underwater Applications

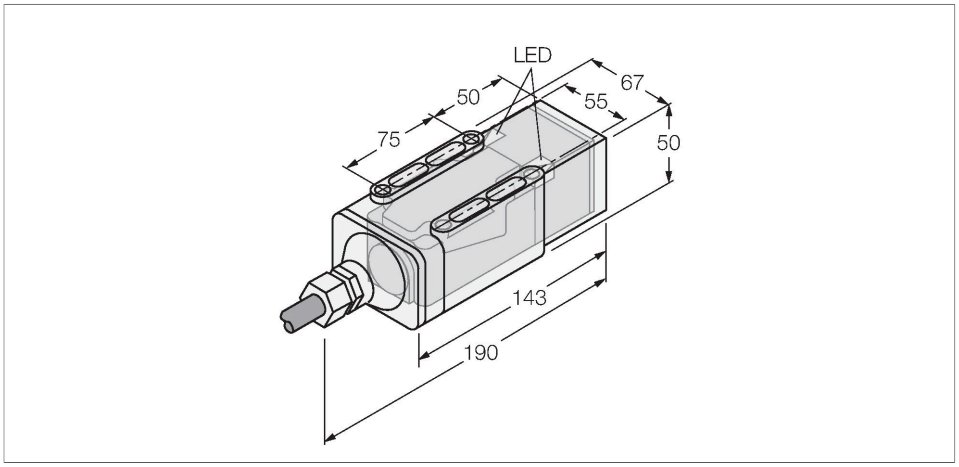

Features

- Rectangular, height 67 mm
- UV and ozone resistance
- Plastic, Ultem
- Sensor potted in the housing
- Protection class IP68, 50 m water column
- DC 4-wire, 10…65 VDC
- Changeover contact, PNP output
- Cable connection

Wiring diagram

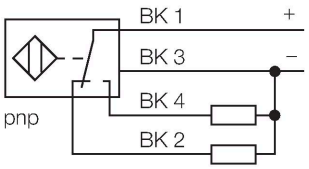

Technical data

Type	NI35-CP40-VP4X2/S369-F 30M
Ident. no.	1569425
Special version	S369 corresponds to: Ni / Bi…-CP40-…../S369-F o. T: with XX m ÖLFLEX rugged 215C 4x0,5 sw1-sw4 in SG40/2 potted (F=Front; T=Top)
Rated switching distance	35 mm
Mounting conditions	Non-flush
Secured operating distance	≤ (0.81 × Sn) mm
Correction factors	St37 = 1; Al = 0.3; stainless steel = 0.7; Ms = 0.4
Repeat accuracy	≤ 2 % of full scale
Temperature drift	≤ ± 10 %
Hysteresis	3…15 %
Ambient temperature	-25…+70 °C
Operating voltage	10…65 VDC
Residual ripple	≤ 10 % U_{ss}
DC rated operational current	≤ 200 mA
No-load current	≤ 15 mA
Residual current	≤ 0.1 mA
Isolation test voltage	≤ 0.5 kV
Short-circuit protection	yes / Cyclic
Voltage drop at I_e	≤ 1.8 V
Wire breakage/Reverse polarity protection	yes / Complete
Output function	4-wire, Complementary contact, PNP
Insulation class	⧈

Functional principle

Inductive sensors detect metal objects contactless and wear-free. For this, they use a high-frequency electromagnetic AC field that interacts with the target. Inductive sensors generate this field via an RLC circuit with a ferrite coil.

NI35-CP40-VP4X2/S369-F 30M| 09/09/2020 14-54 | technical changes reserved

Technical data

Switching frequency	0.15 kHz
Design	Rectangular, CP40
Dimensions	190 x 67 x 50 mm
Housing material	Plastic, Ultem
Active area material	Plastic, Ultem
Electrical connection	Cable
Cable quality	Ø 6.6 mm, Ölflex rugged 215C, TPE, 30 m
Core cross-section	4 x 0.5 mm^2
Vibration resistance	55 Hz (1 mm)
Shock resistance	30 g (11 ms)
Protection class	IP68
Power-on indication	2 × LEDs, Green
Switching state	2 × LEDs, Yellow

Mounting instructions

Mounting instructions/Description

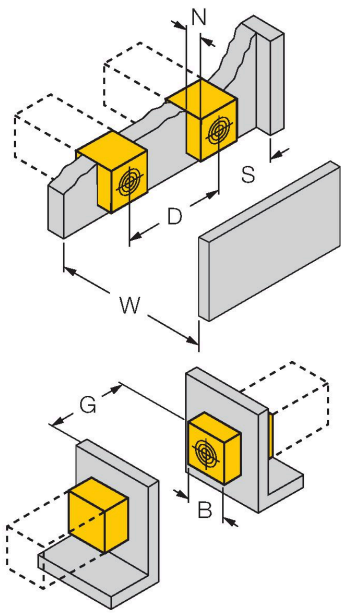

Distance D	4.5 x B
Distance W	3 x Sn
Distance S	1.5 x B
Distance G	6 x Sn
Distance N	1 x B
Width active area B	40 mm

NI35-CP40-VP4X2/S369-F 30M| 09/09/2020 14-54 | technical changes reserved