NI35-CP40-VN4X2
Inductive Sensor

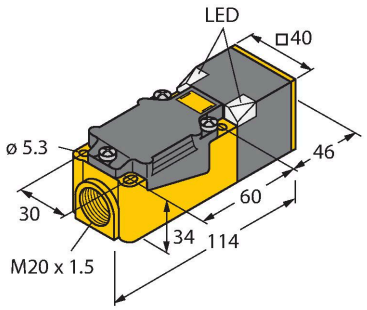

Technical data

Type	NI35-CP40-VN4X2
Ident. no.	15794
Rated switching distance	35 mm
Mounting conditions	Non-flush
Secured operating distance	≤ (0.81 × Sn) mm
Correction factors	St37 = 1; Al = 0.3; stainless steel = 0.7; Ms = 0.4
Repeat accuracy	≤ 2 % of full scale
Temperature drift	≤ ± 10 %
Hysteresis	3…15 %
Ambient temperature	-25…+70 °C
Operating voltage	10…65 VDC
Residual ripple	≤ 10 % U_{ss}
DC rated operational current	≤ 200 mA
No-load current	≤ 15 mA
Residual current	≤ 0.1 mA
Isolation test voltage	≤ 0.5 kV
Short-circuit protection	yes / Cyclic
Voltage drop at I_e	≤ 1.8 V
Wire breakage/Reverse polarity protection	yes / Complete
Output function	4-wire, Complementary contact, NPN
Switching frequency	0.15 kHz
Design	Rectangular, CP40
Dimensions	114 x 40 x 40 mm

Features

- Rectangular, height 40 mm
- Variable orientation of active face in 9 directions
- Plastic, PBT-GF30-V0
- High luminance corner LEDs
- Optimum view on supply voltage and switching state from any position
- DC 4-wire, 10…65 VDC
- Changeover contact, NPN output
- Terminal chamber

Wiring diagram

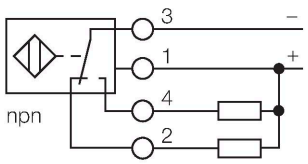

Functional principle

Inductive sensors detect metal objects contactless and wear-free. For this, they use a high-frequency electromagnetic AC field that interacts with the target. Inductive sensors generate this field via an RLC circuit with a ferrite coil.

NI35-CP40-VN4X2| 09/09/2020 14-56 | technical changes reserved

Technical data

Housing material	Plastic, PBT-GF30-V0, Black
Active area material	Plastic, PBT-GF30-V0, yellow
Electrical connection	Terminal chamber
Clamping ability	≤ 2.5 mm²
Vibration resistance	55 Hz (1 mm)
Shock resistance	30 g (11 ms)
Protection class	IP67
MTTF	2283 years acc. to SN 29500 (Ed. 99) 40 °C
Power-on indication	2 × LEDs, Green
Switching state	2 × LEDs, Yellow

Mounting instructions

Mounting instructions/Description

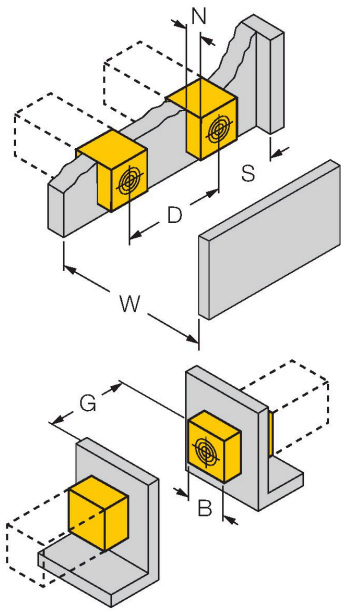

Distance D	4.5 x B
Distance W	3 x Sn
Distance S	1.5 x B
Distance G	6 x Sn
Distance N	1 x B
Width active area B	40 mm

Accessories

STRM M20X1.5 SCHWARZ	6965902

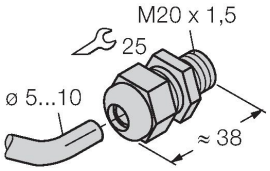

M20 × 1.5 cable gland

Adjusting bar JS 025/037	69429

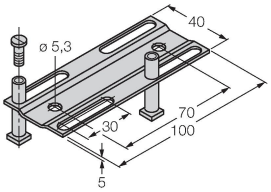

Adjusting bar for rectangular housings CK/CP40; material: VA 1.4301

NI35-CP40-VN4X2| 09/09/2020 14-56 | technical changes reserved

BSS-CP40	6901318

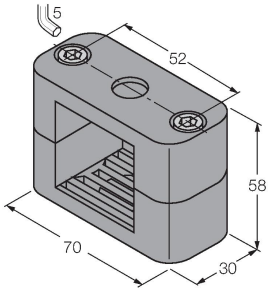

Mounting clamp for rectangular housings 40 x 40 mm; material: Polypropylene

NI35-CP40-VN4X2| 09/09/2020 14-56 | technical changes reserved