NI8U-EG12SK-VP4X
Inductive Sensor

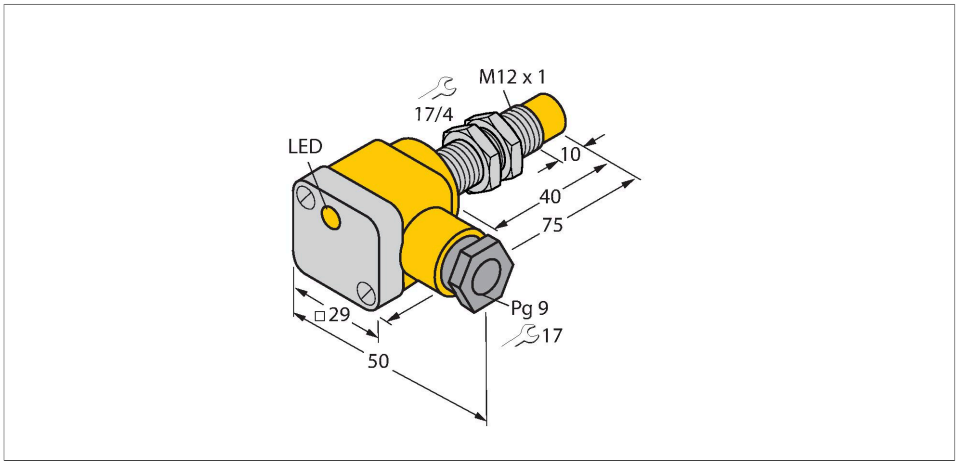

Technical data

Type	NI8U-EG12SK-VP4X
Ident. no.	1580901
Rated switching distance	8 mm
Mounting conditions	Non-flush
Secured operating distance	≤ (0.81 × Sn) mm
Repeat accuracy	≤ 2 % of full scale
Temperature drift	≤ ± 10 %
	≤ ± 15 %, ≤ -25 °C v ≥ +70 °C
Hysteresis	3…15 %
Ambient temperature	-30…+85 °C
Operating voltage	10…65 VDC
Residual ripple	≤ 10 % U_{ss}
DC rated operational current	≤ 200 mA
No-load current	≤ 15 mA
Residual current	≤ 0.1 mA
Isolation test voltage	≤ 0.5 kV
Short-circuit protection	yes / Cyclic
Voltage drop at I_e	≤ 1.8 V
Wire breakage/Reverse polarity protection	yes / Complete
Output function	4-wire, Complementary contact, PNP
Insulation class	⧈
Switching frequency	2 kHz
Design	Threaded barrel, M12 × 1
Dimensions	75 mm

Features

- Threaded barrel, M12 x 1
- Stainless steel, 1.4301
- Factor 1 for all metals
- Protection class IP68
- Resistant to magnetic fields
- Extended temperature range
- High switching frequency
- DC 4-wire, 10…65 VDC
- Changeover contact, PNP output
- Terminal chamber

Wiring diagram

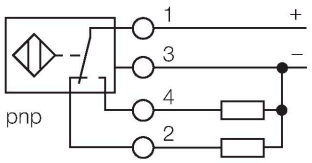

Functional principle

Inductive sensors are designed for wear-free and contactless detection of metal objects. uprox Factor 1 sensors have significant advantages due to their patented ferrite-coreless multi-coil system. They detect all metals at the same large switching distance and are resistant to magnetic fields.

NI8U-EG12SK-VP4X| 09/09/2020 14-57 | technical changes reserved

Technical data

Housing material	Stainless steel, 1.4301 (AISI 304)
Terminal chamber cover material	plastic, Ultem
Terminal chamber housing material	plastic, PA12-GF30
Active area material	Plastic, PBT
Max. tightening torque housing nut	10 Nm
Electrical connection	Terminal chamber
Clamping ability	≤ 1.5 mm²
Cable external diameter	4.5…8 mm
Vibration resistance	55 Hz (1 mm)
Shock resistance	30 g (11 ms)
Protection class	IP68
MTTF	874 years acc. to SN 29500 (Ed. 99) 40 °C
Switching state	LED, Yellow
Included in delivery	cable gland; 2x plastic seals

Mounting instructions

Mounting instructions/Description

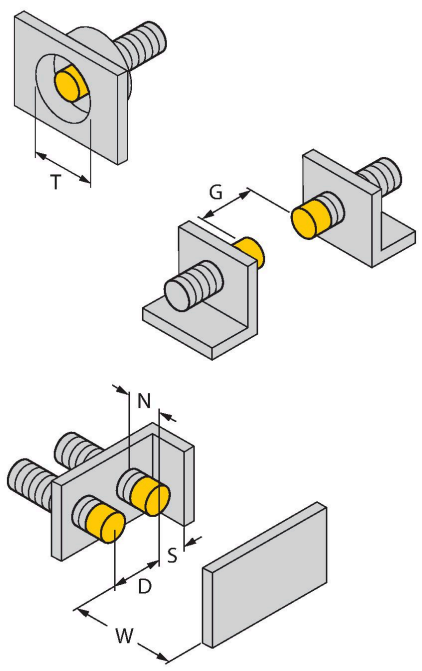

Distance D	3 x B
Distance W	3 x Sn
Distance T	45 mm
Distance S	1.5 x B
Distance G	6 x Sn
Distance N	2 x Sn
Diameter active area B	Ø 12 mm

NI8U-EG12SK-VP4X| 09/09/2020 14-57 | technical changes reserved

Accessories

BST-12B	6947212
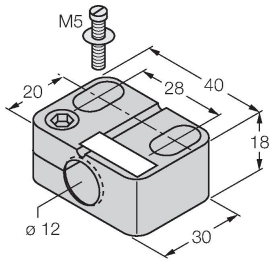	Mounting clamp for threaded barrel sensors, with dead-stop; material: PA6

QM-12	6945101
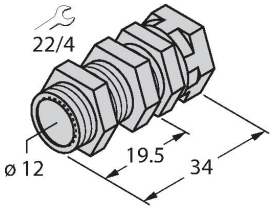	Quick-mount bracket with dead-stop; material: Chrome-plated brass. Male thread M16 × 1. Note: The switching distance of the proximity switches may change when using quick-mount brackets.

MW-12	6945003
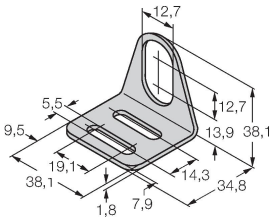	Mounting bracket for threaded barrel sensors; material: Stainless steel A2 1.4301 (AISI 304)

BSS-12	6901321
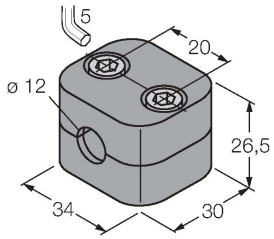	Mounting clamp for smooth and threaded barrel sensors; material: Polypropylene

NI8U-EG12SK-VP4X| 09/09/2020 14-57 | technical changes reserved