# BI5U-M18M-VN4X-H1141
# Inductive Sensor

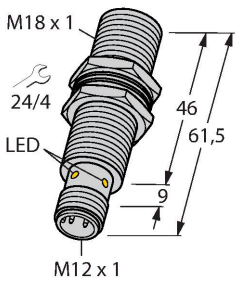


## Technical data

| | |
|---|---|
| Type | BI5U-M18M-VN4X-H1141 |
| ID no. | 1581311 |
| Rated switching distance | 5 mm |
| Mounting conditions | Flush |
| Secured operating distance | ≤ (0.81 × Sn) mm |
| Repeat accuracy | ≤ 2 % of full scale |
| Temperature drift | ≤ ± 10 % |
| | ≤ ± 15 %, ≤ -25 °C v ≥ +70 °C |
| Hysteresis | 3…15 % |
| Ambient temperature | -30…+85 °C |
| Operating voltage | 10…65 VDC |
| Residual ripple | ≤ 10 % $U_{ss}$ |
| DC rated operational current | ≤ 200 mA |
| No-load current | ≤ 15 mA |
| Residual current | ≤ 0.1 mA |
| Isolation test voltage | ≤ 0.5 kV |
| Short-circuit protection | yes / Cyclic |
| Voltage drop at $I_e$ | ≤ 1.8 V |
| Wire breakage/Reverse polarity protection | yes / Complete |
| Output function | 4-wire, Complementary contact, NPN |
| Insulation class | ⧈ |
| Switching frequency | 1.5 kHz |
| Design | Threaded barrel, M18 × 1 |
| Dimensions | 61.5 mm |

## Features

- Threaded barrel, M18 x 1
- Chrome-plated brass
- Factor 1 for all metals
- Protection class IP68
- Resistant to magnetic fields
- Extended temperature range
- High switching frequency
- DC 4-wire, 10…65 VDC
- Changeover contact, NPN output
- M12 x 1 male connector

## Wiring diagram

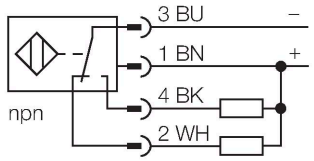


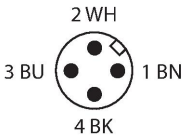


## Functional principle

Inductive sensors are designed for wear-free and contactless detection of metal objects. uprox Factor 1 sensors have significant advantages due to their patented ferrite-coreless multi-coil system. They detect all metals at the same large switching distance and are resistant to magnetic fields.

BI5U-M18M-VN4X-H1141| 07/22/2021 11-10 | technical changes reserved

## Technical data

| | |
|---|---|
| Housing material | Metal, CuZn, Chrome-plated |
| Active area material | Plastic, PBT |
| Max. tightening torque of housing nut | 25 Nm |
| Electrical connection | Connector, M12 × 1 |
| Vibration resistance | 55 Hz (1 mm) |
| Shock resistance | 30 g (11 ms) |
| Protection class | IP68 |
| MTTF | 874 years acc. to SN 29500 (Ed. 99) 40 °C |
| Switching state | LED, Yellow |

## Mounting instructions

Mounting instructions/Description

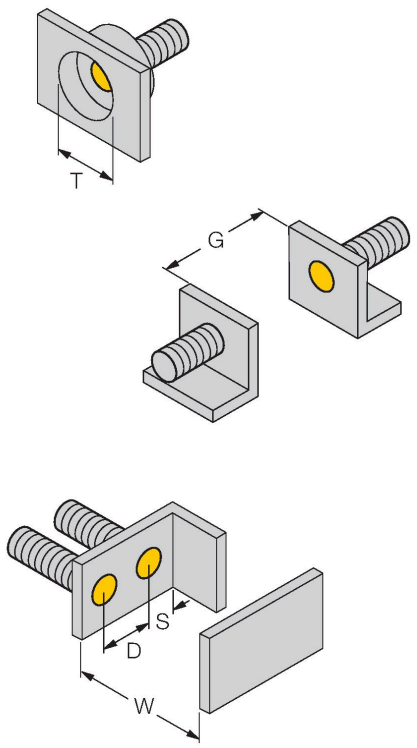


| | |
|---|---|
| Distance D | 2 x B |
| Distance W | 3 x Sn |
| Distance T | 3 x B |
| Distance S | 1.5 x B |
| Distance G | 6 x Sn |
| Diameter active area B | Ø 18 mm |

BI5U-M18M-VN4X-H1141| 07/22/2021 11-10 | technical changes reserved

## Accessories

| MW-18 | 6945004 |
|---|---|
| 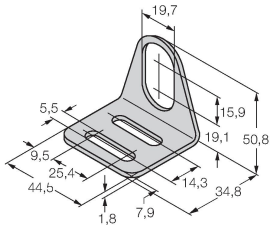 | Mounting bracket for threaded barrel sensors; material: Stainless steel A2 1.4301 (AISI 304) |

| BSS-18 | 6901320 |
|---|---|
| 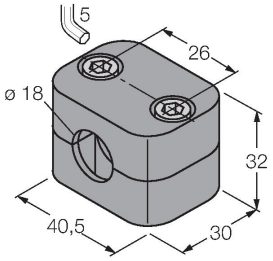 | Mounting clamp for smooth and threaded barrel sensors; material: Polypropylene |

## Wiring accessories

| Dimension drawing | Type | ID no. | |
|---|---|---|---|
|  | RKC4.4T-2/TEL | 6625013 | Connection cable, female M12, straight, 4-pin, cable length: 2 m, sheath material: PVC, black; cULus approval; other cable lengths and qualities available, see www.turck.com |