# NI12U-M18M-VP4X
# Inductive Sensor

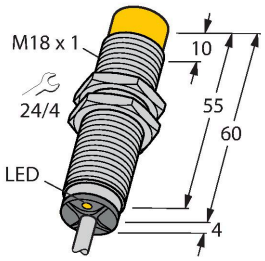


## Technical data

| | |
|---|---|
| Type | NI12U-M18M-VP4X |
| Ident. no. | 1581403 |
| Rated switching distance | 12 mm |
| Mounting conditions | Non-flush |
| Secured operating distance | ≤ (0.81 × Sn) mm |
| Repeat accuracy | ≤ 2 % of full scale |
| Temperature drift | ≤ ± 10 % |
| | ≤ ± 15 %, ≤ -25 °C v ≥ +70 °C |
| Hysteresis | 3…15 % |
| Ambient temperature | -30…+85 °C |
| Operating voltage | 10…65 VDC |
| Residual ripple | ≤ 10 % $U_{ss}$ |
| DC rated operational current | ≤ 200 mA |
| No-load current | ≤ 15 mA |
| Residual current | ≤ 0.1 mA |
| Isolation test voltage | ≤ 0.5 kV |
| Short-circuit protection | yes / Cyclic |
| Voltage drop at $I_e$ | ≤ 1.8 V |
| Wire breakage/Reverse polarity protection | yes / Complete |
| Output function | 4-wire, Complementary contact, PNP |
| Insulation class | ⧈ |
| Switching frequency | 1.5 kHz |
| Design | Threaded barrel, M18 × 1 |
| Dimensions | 64 mm |

## Features

- Threaded barrel, M18 x 1
- Chrome-plated brass
- Factor 1 for all metals
- Protection class IP68
- Resistant to magnetic fields
- Extended temperature range
- High switching frequency
- DC 4-wire, 10…65 VDC
- Changeover contact, PNP output
- Cable connection

## Wiring diagram

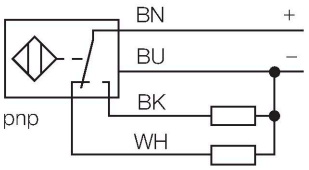


## Functional principle

Inductive sensors are designed for wear-free and contactless detection of metal objects. uprox Factor 1 sensors have significant advantages due to their patented ferrite-coreless multi-coil system. They detect all metals at the same large switching distance and are resistant to magnetic fields.

NI12U-M18M-VP4X| 09/09/2020 14-58 | technical changes reserved

## Technical data

| | |
|---|---|
| Housing material | Metal, CuZn, Chrome-plated |
| Active area material | Plastic, PBT |
| End cap | Plastic, EPTR |
| Max. tightening torque housing nut | 25 Nm |
| Electrical connection | Cable |
| Cable quality | Ø 5.2 mm, Gray, LifYY, PVC, 2 m |
| Core cross-section | 4 x 0.34 $mm^2$ |
| Vibration resistance | 55 Hz (1 mm) |
| Shock resistance | 30 g (11 ms) |
| Protection class | IP68 |
| MTTF | 874 years acc. to SN 29500 (Ed. 99) 40 °C |
| Switching state | LED, Yellow |

## Mounting instructions

Mounting instructions/Description

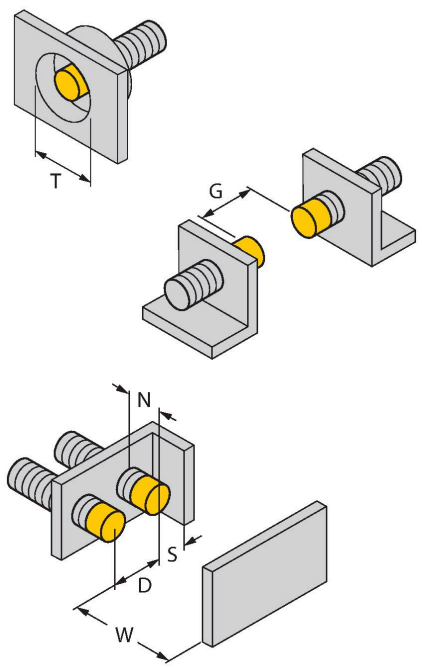


| | |
|---|---|
| Distance D | 3 x B |
| Distance W | 3 x Sn |
| Distance T | 65 mm |
| Distance S | 1.5 x B |
| Distance G | 6 x Sn |
| Distance N | 2 x Sn |
| Diameter active area B | Ø 18 mm |

NI12U-M18M-VP4X| 09/09/2020 14-58 | technical changes reserved

## Accessories

| MW-18 | 6945004 |
|---|---|
| 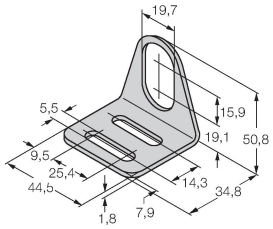 | Mounting bracket for threaded barrel sensors; material: Stainless steel A2 1.4301 (AISI 304) |

| BSS-18 | 6901320 |
|---|---|
| 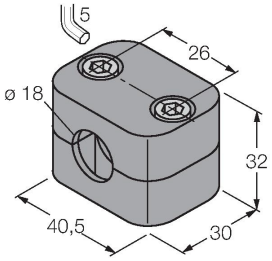 | Mounting clamp for smooth and threaded barrel sensors; material: Polypropylene |