BI7-Q08-AP6X2-0.2-RS4T/S1589
Inductive Sensor – With Weldguard® coating

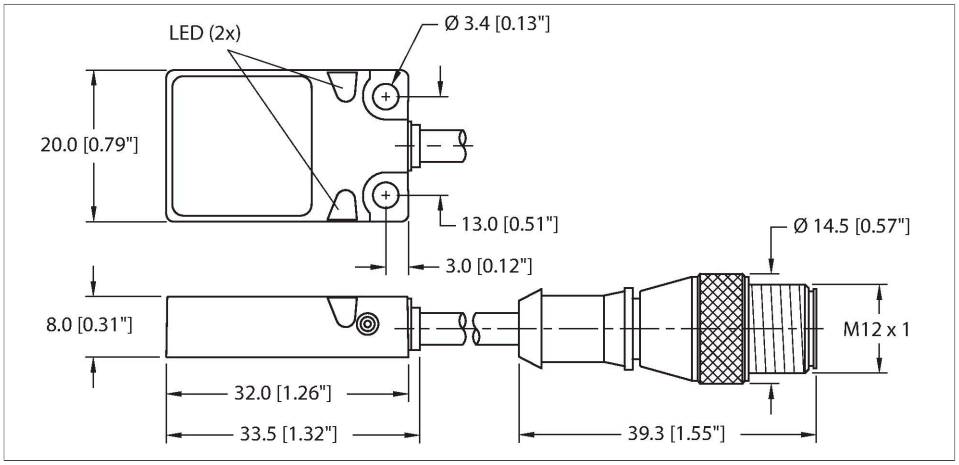

Technical data

Type	BI7-Q08-AP6X2-0.2-RS4T/S1589
ID	16016001
Special version	S1589 Corresponds to:With weldguard coating
General data	
Rated switching distance	7 mm
Mounting conditions	Flush
Secured operating distance	≤ (0.81 × Sn) mm
Correction factors	St37 = 1; Al = 0.3; stainless steel = 0.7; Ms = 0.4
Repeat accuracy	≤ 2 % of full scale
Hysteresis	3…15 %
Electrical data	
Operating voltage U_B	10…30 VDC
Ripple U_{ss}	≤ 10 % U_{Bmax}
DC rated operating current I_e	≤ 200 mA
No-load current	≤ 15 mA
Residual current	≤ 0.1 mA
Isolation test voltage	0.5 kV
Short-circuit protection	yes/Cyclic
Voltage drop at I_e	≤ 1.8 V
Wire break/reverse polarity protection	yes/Complete
Output function	3-wire, NO contact, PNP
Switching frequency	0.5 kHz

Features

- Rectangular, height 8 mm
- Active face on top
- Metal, Zamak, nickel-plated
- DC 3-wire, 10…30 VDC
- NO contact, PNP output
- Pigtail with male end M12 x 1

Wiring diagram

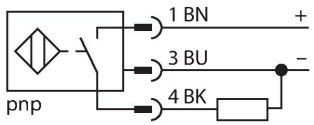

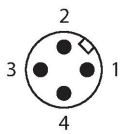

Functional principle

Inductive sensors detect metal objects contactless and wear-free. For this purpose they use a high-frequency electromagnetic AC field that interacts with the target. The sensors hosting a ferrite core coil generate the AC field through an LC resonant circuit.

BI7-Q08-AP6X2-0.2-RS4T/S1589| 02/21/2025 13-52 | technical changes reserved

Technical data

Mechanical data	
Design	Rectangular, Q08
Dimensions	32 x 20 x 8 mm
Housing material	Metal, Zamak, Nickel Plated
Active area material	Plastic, PP, yellow
Material coupling nut	metal, CuZn, nickel-plated
Electrical connection	Cable with connector, M12 × 1
Cable quality	Ø 3 mm, Gray, Lif9Y-11Y, PUR, 0.2 m
	Suited for E-ChainSystems® acc. to manufacturers declaration H1063M
Core cross-section	3 x 0.14 mm^2
Environmental conditions	
Ambient temperature	-25…+70 °C
Vibration resistance	55 Hz (1 mm)
Shock resistance	30 g (11 ms)
Protection class	IP68
MTTF	2283 years acc. to SN 29500 (Ed. 99) 40 °C
Power-on indication	LED, Green
Switching state	LED, Yellow

Mounting instructions

Mounting instructions/Description

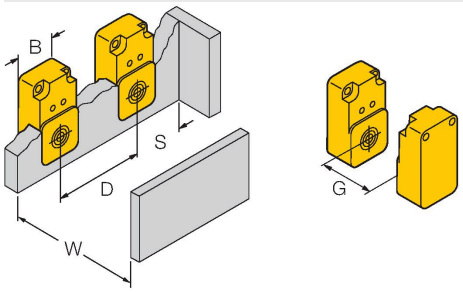

Distance D	40 mm
Distance W	24 mm
Distance S	1 × B
Distance G	48 mm
Width active area B	20 mm

BI7-Q08-AP6X2-0.2-RS4T/S1589| 02/21/2025 13-52 | technical changes reserved