NI40-CQ80-L1131/S1102
Inductive Sensor – With Increased Temperature Range

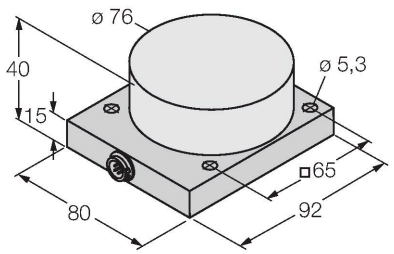

Technical data

Type	NI40-CQ80-L1131/S1102
Ident. no.	1602406
Special version	S1102 corresponds to: T up to 250 °C || (Attention: TUSA cordsets S1101 - S1127 same SNummer)
Rated switching distance	40 mm
Mounting conditions	Non-flush, partially embeddable
Secured operating distance	≤ (0.81 × Sn) mm
Correction factors	St37 = 1; Al = 0.3; stainless steel = 0.7; Ms = 0.4
Repeat accuracy	≤ 2 % of full scale
Hysteresis	3…15 %
Ambient temperature	0…+250 °C
Output function	NO contact, PNP
Design	Rectangular, CQ80
Dimensions	92 x 80 x 40 mm
Housing material	Plastic, AL
Active area material	PEEK
Electrical connection	Connector
Vibration resistance	55 Hz (1 mm)
Shock resistance	30 g (11 ms)
Protection class	IP50
MTTF	1015 years acc. to SN 29500 (Ed. 99) 40 °C

Features

- Rectangular, height 40 mm
- Sensor housing, Aluminium
- Plastic, PEEK
- Temperatures up to +250 °C
- Functions only with signal processor EM30-AP6X2-H1141/S1102 as well as high-temperature connecting cable HTC1102 * M
- Switchpoint adjusted at the processing unit
- 3-wire connection to the processor

Wiring diagram

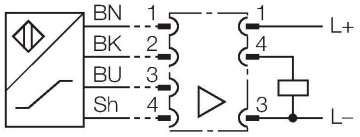

Functional principle

The sensors must be operated with an EM30-AP6X2-H1141/S1102 signal processor. The switching distance is set using a potentiometer (continuous) on the signal processor. This is located under a cover screw next to the LED. Where possible, the switching distance must be set at operating temperature. When setting the switching distance at room temperature, the temperature sensitivity of the sensor system must be taken into account.
Setting:
1. Place the target (steel, min. 1 mm thick, square, edge length min. 3x rated switching distance) at a safe switching distance in front of the sensor
2. Turn the potentiometer counterclockwise until the LED lights up green
3. Turn the potentiometer clockwise until the LED lights up yellow
4. Perform functional checks in the operating state

NI40-CQ80-L1131/S1102| 09/09/2020 14-29 | technical changes reserved

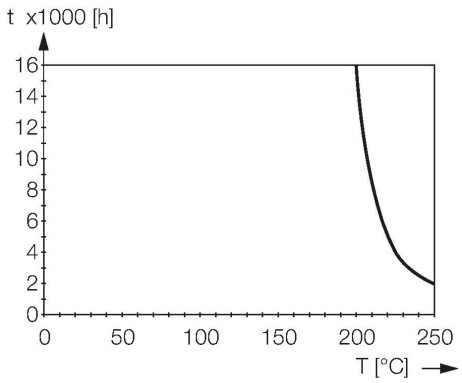

Mounting instructions

Mounting instructions/Description	
Distance D	3 x B
Distance W	3 x Sn
Distance S	1.5 x B
Distance G	6 x Sn
Distance A	1 x Sn
Distance C	2 x Sn
Width active area B	76 mm

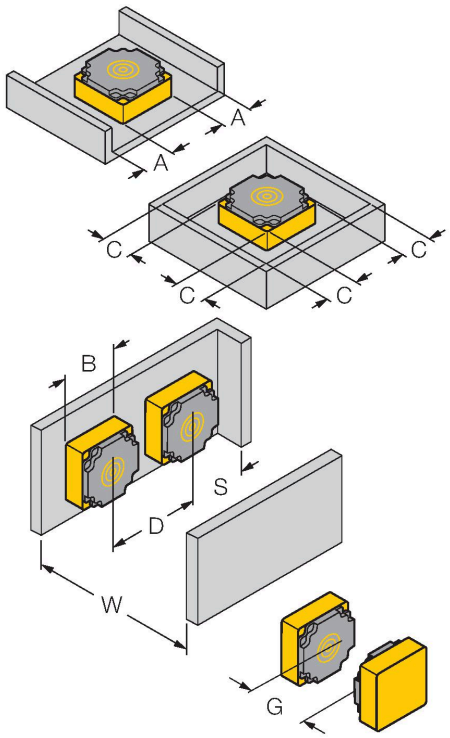

NI40-CQ80-L1131/S1102| 09/09/2020 14-29 | technical changes reserved

Accessories

EM30-AP6X2-H1141/S1102	1602411
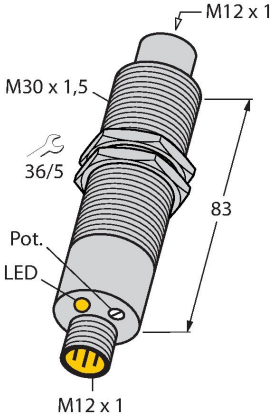	Signal processor for 250 °C sensor; housing material: Stainless steel 1.4571; protection type: IP67; function display: LED/yellow; power ON indication: LED/green; ambient temperature: -25 °C…+70 °C

HTC1102 10M	1602407
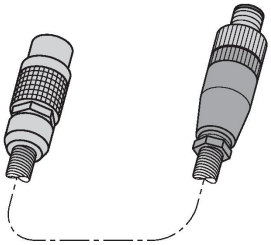	High-temperature connection cable with aluminum protective sleeve, 10 m; up to 250 °C ambient temperature

NI40-CQ80-L1131/S1102| 09/09/2020 14-29 | technical changes reserved