BI5U-Q08-AP6X2-0.2-RSE4T-P7X2
Inductive Sensor

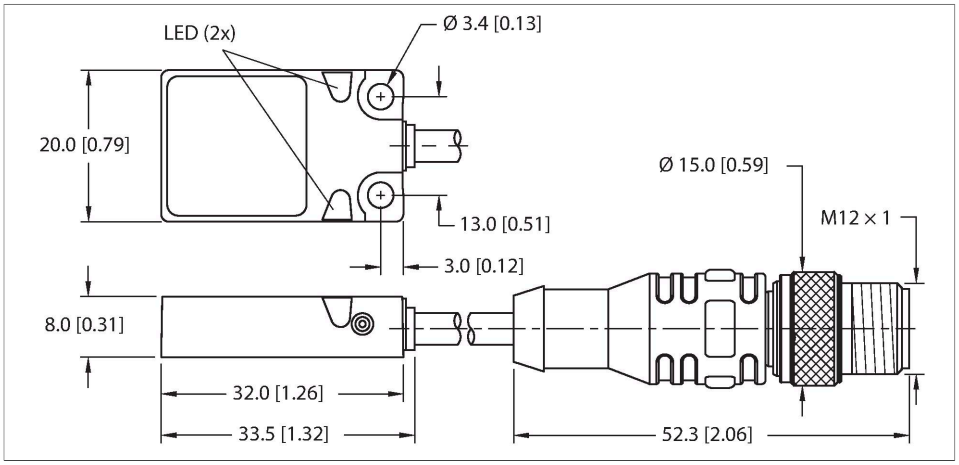

Technical data

Type	BI5U-Q08-AP6X2-0.2-RSE4T-P7X2
ID	1608970
General data	
Rated switching distance	5 mm
Mounting conditions	Flush
Secured operating distance	≤ (0.81 × Sn) mm
Repeat accuracy	≤ 2 % of full scale
	≤ ± 15 %, ≤ -25 °C v ≥ +70 °C
Hysteresis	3…15 %
Electrical data	
Operating voltage U_B	10…30 VDC
Ripple U_{ss}	≤ 10 % U_{Bmax}
DC rated operating current I_e	≤ 200 mA
No-load current	≤ 15 mA
Residual current	≤ 0.1 mA
Isolation test voltage	0.5 kV
Short-circuit protection	yes/Cyclic
Voltage drop at I_e	≤ 1.8 V
Wire break/reverse polarity protection	yes/Complete
Output function	3-wire, NO contact, PNP
DC field stability	300 mT
AC field stability	300 mT_{ss}
Insulation class	⧈
Switching frequency	0.25 kHz

Features

- Rectangular, height 8 mm
- Active face on top
- Metal, Zamak, nickel-plated
- Factor 1 for all metals
- Protection class IP68
- Resistant to magnetic fields
- Extended temperature range
- High switching frequency
- DC 3-wire, 10…30 VDC
- NO contact, PNP output
- Pigtail with male end M12 x 1

Wiring diagram

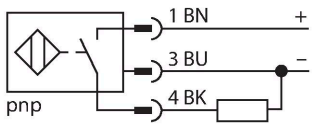

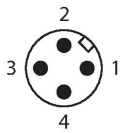

Functional principle

Inductive sensors are designed for wear-free and contactless detection of metal objects. uprox Factor 1 sensors have significant advantages due to their patented ferrite-coreless multi-coil system. They detect all

BI5U-Q08-AP6X2-0.2-RSE4T-P7X2 02/21/2025 14-00 | technical changes reserved

Technical data

Mechanical data	
Design	Rectangular, Q08
Dimensions	32 x 20 x 8 mm
Housing material	Metal, Zamak, Nickel Plated
Active area material	Plastic, PP, yellow
Material coupling nut	metal, CuZn
Electrical connection	Cable with connector, M12 × 1
Cable quality	Ø 3 mm, Gray, Lif9Y-11Y, PUR, 0.2 m
	Suited for E-ChainSystems® acc. to manufacturers declaration H1063M
Core cross-section	3 x 0.14 mm^2
Environmental conditions	
Ambient temperature	-30…+85 °C
Vibration resistance	55 Hz (1 mm)
Shock resistance	30 g (11 ms)
Protection class	IP68
MTTF	874 years acc. to SN 29500 (Ed. 99) 40 °C
Power-on indication	LED, Green
Switching state	LED, Yellow

metals at the same large switching distance and are resistant to magnetic fields.

Mounting instructions

Mounting instructions/Description

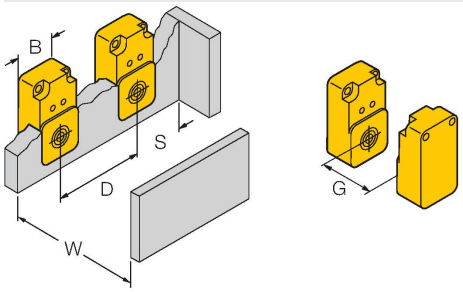

Distance D	40 mm
Distance W	15 mm
Distance S	1 × B
Distance G	30 mm
Width active area B	20 mm

BI5U-Q08-AP6X2-0.2-RSE4T-P7X2| 02/21/2025 14-00 | technical changes reserved