RU130U-M18ES-LIU2PN8X2T-H1151
Ultrasonic Sensor – Diffuse Mode Sensor

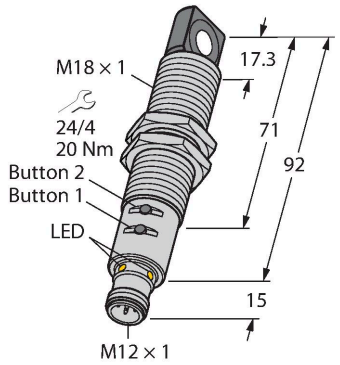



Technical data

Type	RU130U-M18ES-LIU2PN8X2T-H1151
ID	1610027
Ultrasonic data	
Function	Proximity
Range	150…1300 mm
Resolution	1 mm
Minimum measuring range	100 mm
Minimum switching range	10 mm
Ultrasound frequency	200 kHz
Repeat accuracy	≤ 0.15 % of full scale
Temperature drift	± 1.5 % of full scale
Linearity error	≤ ± 0.5 %
Edge lengths of the nominal actuator	100 mm
Approach speed	≤ 10 m/s
Pass speed	≤ 2 m/s
Electrical data	
Operating voltage U_B	15…30 VDC
Residual ripple	10 % U_{ss}
DC rated operating current I_e	≤ 150 mA
No-load current	≤ 50 mA
Load resistance	≤ 1000 Ω
Residual current	≤ 0.1 mA
Response time typical	< 90 ms

Features

- Rectangular transducer front
- Cylindrical housing M18, potted
- Connection via M12 x 1 male
- Teach range adjustable via pushbutton or adapter
- Temperature compensation
- Blind zone: 15 cm
- Range: 130 cm
- Resolution: 1 mm
- Aperture angle of sonic cone: ±16 °
- 1 × switching output, PNP/NPN
- 1 × analog output, 4…20 mA / 0…10 V / additional switching output, PNP/NPN
- NO/NC programmable
- Transmission of process value and parametrization via IO-link

Wiring diagram

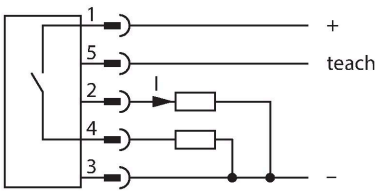

Functional principle

Ultrasonic sensors capture a multitude of objects contactlessly and wear-free with ultrasonic waves. It does not matter whether the object is transparent or opaque, metallic or non-metallic, firm, liquid or powdery. Even environmental conditions such as spray, dust or rain hardly affect their function.

RU130U-M18ES-LIU2PN8X2T-H1151| 03/05/2025 13-57 | technical changes reserved

Technical data

Readiness delay	≤ 300 ms
Communication protocol	IO-Link
Output function	NO/NC, PNP/NPN, analog output
Output 1	Switching output or IO-Link mode
Output 2	Analog output
Current output	4…20 mA
Load resistance current output	≤ 0.5 kΩ
Voltage output	0…10 V
Load resistance voltage output	≥ 1 kΩ
Switching frequency	≤ 6.9 Hz
Hysteresis	≤ 10 mm
Voltage drop at I_e	≤ 2.5 V
Short-circuit protection	yes/Cyclic
Reverse polarity protection	yes
Wire breakage protection	yes
Setting option	Push Button Remote Teach IO-Link
IO-Link	
IO-Link specification	V 1.1
IO-Link port type	Class A
Communication mode	COM 2 (38.4 kBaud)
Process data width	16 bit
Measured value information	15 bit
Switchpoint information	1 bit
Frame type	2.2
Minimum cycle time	2 ms
Function pin 4	IO-Link
Function Pin 2	DI
Maximum cable length	20 m
Profile support	Smart Sensor Profile
Included in the SIDI GSDML	Yes
Mechanical data	
Design	Threaded barrel, M18
Radiation direction	side
Dimensions	Ø 18 x 107 mm
Housing material	Metal, CuZn, Nickel Plated
Max. tightening torque of housing nut	20 Nm
Transducer material	Plastic, Epoxyd resin and PU foam

The sonic cone diagram indicates the detection range of the sensor. In accordance with standard EN 60947-5-7, quadratic targets in a range of sizes (20 × 20 mm, 100 × 100 mm) and a round rod with a diameter of 27 mm are used.
Important: The detection ranges for other targets may differ from those for standard targets due to the different reflection properties and geometries.

Sonic Cone

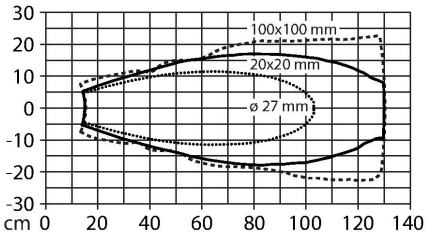

RU130U-M18ES-LIU2PN8X2T-H1151| 03/05/2025 13-57 | technical changes reserved

Technical data

Electrical connection	Connector, M12 × 1, 5-wire
Ambient temperature	-25…+70 °C
Storage temperature	-40…+80 °C
Pressure resistance	0.5…5 bar
Protection class	IP67
Switching state	LED, Yellow
Object detected	LED, Green
Tests/approvals	
MTTF	202 years acc. to SN 29500 (Ed. 99) 40 °C
Declaration of conformity EN ISO/IEC	EN 60947-5-7
Vibration resistance	20 g, 10…55 Hz, sine, 3 axes, 30 min/ axis according to IEC 60068-2-6
Shock test	30 g, 11 ms, half sine, 3 axes according to IEC 60068-2-27
Approvals	CE cULus

Mounting instructions

Mounting instructions/Description

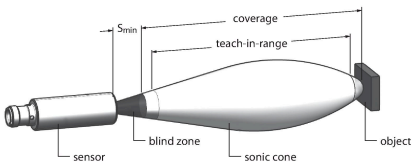

Setting the limit values
The ultrasonic sensor can be parameterized in such a way that you can either set a teachable measuring and switching range via an analog and a switching output, or switching ranges via two switching outputs. These settings are done with the Easy-Teach adapter or with the buttons at the sensor. The green and yellow LEDs indicate whether the sensor has detected the object.

Various functions such as single switchpoint, window mode or reflection mode to a fixed target can be taught. Further information is described in the operating instructions. How to set the window mode by teaching two limits is described below. These two limits form the switching window and can be selected freely within the detection range.

Easy-Teach
• Connect the teach adapter TX1-Q20L60 between the sensor and connection cable
• Position object for the first limit value
• Press and hold the select button for output 1 or 2 for 2 or 8 s against Gnd
• Press and hold the select button for 8 s against Gnd to teach the first limit value
• Position object for the second limit value
•Press and hold button for at least 2 s against Gnd

Teach button

RU130U-M18ES-LIU2PN8X2T-H1151| 03/05/2025 13-57 | technical changes reserved

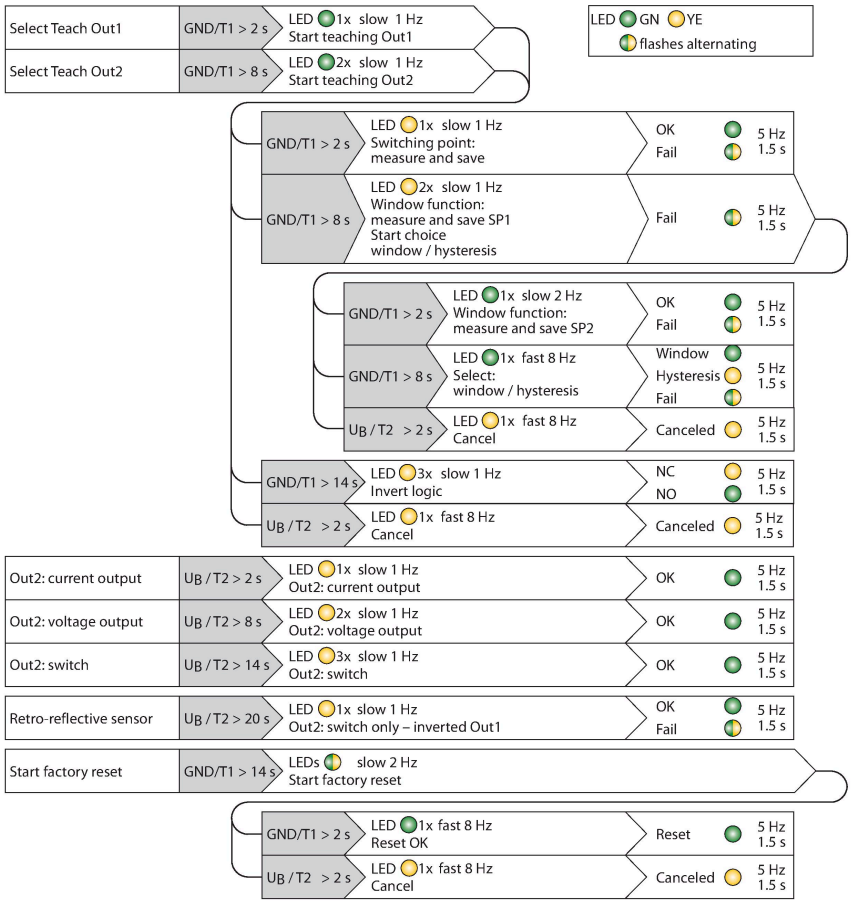

- Position object for the first limit value
- Press and hold button 1 to select output 1 or 2 for 2 or 8 s against Gnd
- Press and hold button 1 for at least 8 s
- Position object for the second limit value
- Press and hold button 1 for at least 2 s

LED response
Successful teaching is indicated by a fast flashing green LED. The sensor then automatically runs in normal operating mode. Unsuccessful teach-in is indicated by the LED flashing alternately green and yellow.
In normal operating mode, both LEDs signal the switching state of output 1.
- Green: Object is within the detection range but not in the switching range
- Yellow: Object is within the switching range
- Off: Object is outside the detection range or signal loss

Accessories

MW18	6945004

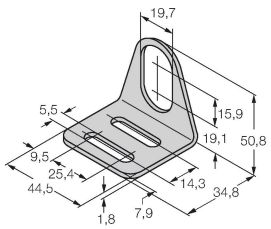

Mounting bracket for threaded barrel sensors; material: Stainless steel A2 1.4301 (AISI 304)

Wiring accessories

Dimension drawing	Type	ID	
	RKC4.5T-2/TEL	6625016	Connection cable, M12 female connector, straight, 5-pin, cable length: 2 m, jacket material: PVC, black; cULus approval



RU130U-M18ES-LIU2PN8X2T-H1151| 03/05/2025 13-57 | technical changes reserved

Dimension drawing	Type	ID	
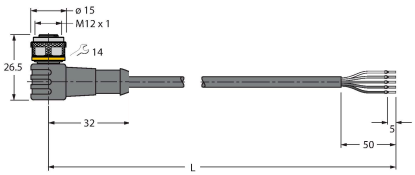	WKC4.5T-2/TEL	6625028	Connection cable, M12 female connector, angled, 5-pin, cable length: 2 m, jacket material: PVC, black; cULus approval

Accessories

Dimension drawing	Type	ID	
	USB-2-IOL-0002	6825482	IO-Link Master with integrated USB port
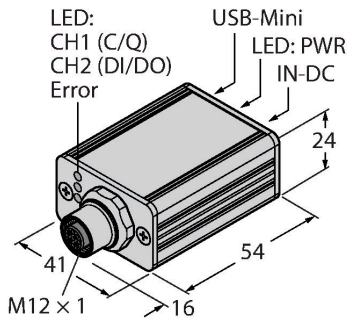			
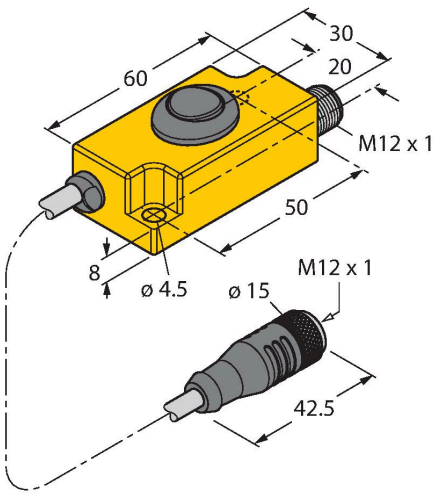	TX1-Q20L60	6967114	Teach adapter for inductive encoders, linear position, angle, ultrasonic and capacitive sensors

RU130U-M18ES-LIU2PN8X2T-H1151| 03/05/2025 13-57 | technical changes reserved

Dimension drawing	Type	ID	
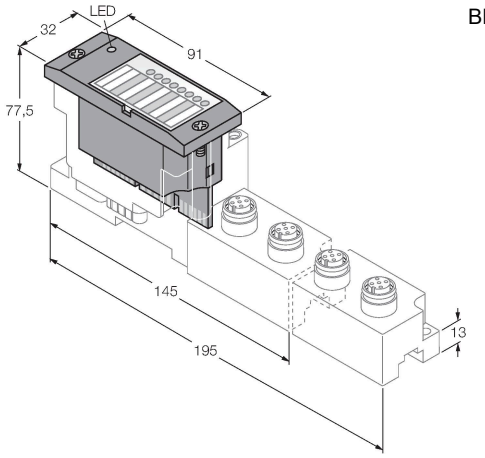	BL67-4IOL	6827386	4-channel IO-Link Master module for the modular BL67 I/O-system
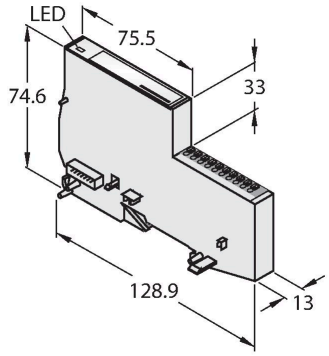	BL20-E-4IOL	6827385	IO-Link master module for the modular BL20 I/O system, 4-channel
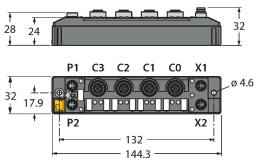	TBEN-S2-4IOL	6814024	Compact multiprotocol I/O module, 4 IO-Link Master 1.1 Class A, 4 universal PNP digital channels 0.5 A

RU130U-M18ES-LIU2PN8X2T-H1151| 03/05/2025 13-57 | technical changes reserved