RU100U-M18MS-AP8X2-H1151
Ultrasonic Sensor – Diffuse Mode Sensor

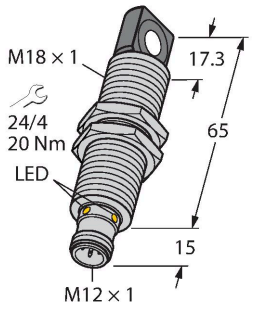

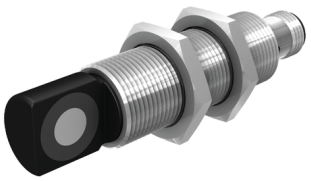

Technical data

Type	RU100U-M18MS-AP8X2-H1151
ID	1610106
Ultrasonic data	
Function	Proximity
Range	150…1000 mm
Resolution	1 mm
Minimum switching range	10 mm
Ultrasound frequency	200 kHz
Repeat accuracy	≤ 0.15 % of full scale
Temperature drift	± 1.5 % of full scale
Linearity error	≤ ± 0.5 %
Edge lengths of the nominal actuator	100 mm
Approach speed	≤ 8 m/s
Pass speed	≤ 2 m/s
Electrical data	
Operating voltage U_B	15…30 VDC
Residual ripple	10 % U_{ss}
DC rated operating current I_e	≤ 150 mA
No-load current	≤ 50 mA
Load resistance	≤ 1000 Ω
Residual current	≤ 0.1 mA
Response time typical	< 90 ms
Readiness delay	≤ 300 ms

Features

- Rectangular transducer front
- Cylindrical housing M18, potted
- Connection via M12 x 1 male
- Temperature compensation
- Blind zone: 15 cm
- Range: 100 cm
- Resolution: 1 mm
- Aperture angle of sonic cone: ±16 °
- PNP switching output
- NO/NC programmable
- IO-Link

Wiring diagram

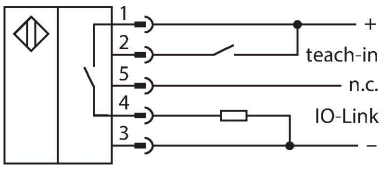

Functional principle

Ultrasonic sensors capture a multitude of objects contactlessly and wear-free with ultrasonic waves. It does not matter whether the object is transparent or opaque, metallic or non-metallic, firm, liquid or powdery. Even environmental conditions such as spray, dust or rain hardly affect their function.
The sonic cone diagram indicates the detection range of the sensor. In accordance with standard EN 60947-5-2, quadratic targets in a range of sizes (20 × 20 mm, 100 × 100 mm) and a round rod with a diameter of 27 mm are used.

RU100U-M18MS-AP8X2-H1151| 03/05/2025 13-55 | technical changes reserved

Technical data

Communication protocol	IO-Link
Output function	NO/NC, PNP
Output 1	Switching output or IO-Link mode
Switching frequency	≤ 6.9 Hz
Hysteresis	≤ 5 mm
Voltage drop at I_e	≤ 2.5 V
Short-circuit protection	yes/Cyclic
Reverse polarity protection	yes
Wire breakage protection	yes
Setting option	Remote Teach IO-Link
IO-Link	
IO-Link specification	V 1.1
IO-Link port type	Class A
Communication mode	COM 2 (38.4 kBaud)
Process data width	16 bit
Measured value information	15 bit
Switchpoint information	1 bit
Frame type	2.2
Minimum cycle time	2 ms
Function pin 4	IO-Link
Function Pin 2	DI
Maximum cable length	20 m
Profile support	Smart Sensor Profile
Included in the SIDI GSDML	Yes
Mechanical data	
Design	Threaded barrel, M18
Radiation direction	side
Dimensions	Ø 18 x 80 mm
Housing material	Metal, CuZn, Nickel Plated
Max. tightening torque of housing nut	20 Nm
Transducer material	Plastic, Epoxyd resin and PU foam
Electrical connection	Connector, M12 × 1, 5-wire
Ambient temperature	-25…+70 °C
Storage temperature	-40…+80 °C
Pressure resistance	0.5…5 bar
Protection class	IP67
Switching state	LED, Yellow

Important: The detection ranges for other targets may differ from those for standard targets due to the different reflection properties and geometries.

Sonic Cone

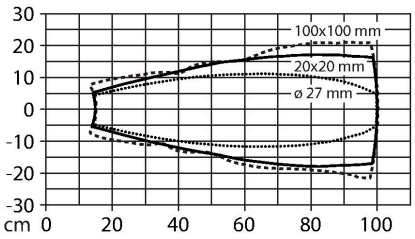

RU100U-M18MS-AP8X2-H1151| 03/05/2025 13-55 | technical changes reserved

Technical data

Object detected	LED, Green
Tests/approvals	
MTTF	202 years acc. to SN 29500 (Ed. 99) 40 °C
Declaration of conformity EN ISO/IEC	EN 60947-5-2
Vibration resistance	20 g, 10…55 Hz, sine, 3 axes, 30 min/ axis according to IEC 60068-2-6
Shock test	30 g, 11 ms, half sine, 3 axes according to IEC 60068-2-27
Approvals	CE cULus

Mounting instructions

Mounting instructions/Description

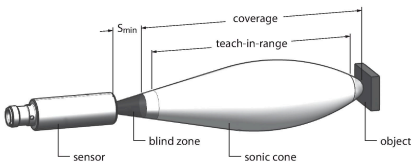

Setting the switchpoint
The ultrasonic sensor features a switching output with a teachable switching point. The green and yellow LEDs indicate whether the sensor has detected the object.

One switching point is taught. This must be within the detection range. In this operating mode the background is suppressed.

Teach
• Connect the teach adaptor between the sensor and connection cable
• Position the object at the beginning of the protection area
• Press the button for 2 - 7 sec against Ub
•Place object at the end of the switching range
• Press the button against Ub for 8 - 11 seconds

After a successful teach-in, the green LED flashes at 2Hz and the sensor runs automatically in normal mode.

LED response
In standard operating mode, the two LEDs indicate the switching state of the sensor.
• Green: Object within the detection range but not in switching range
• Yellow: Object is within the switching range
• Off: Object is outside the detection range or signal loss

RU100U-M18MS-AP8X2-H1151| 03/05/2025 13-55 | technical changes reserved

Accessories

MW18	6945004
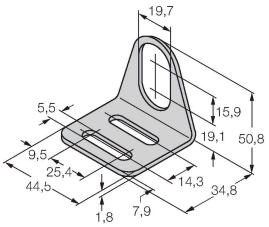	Mounting bracket for threaded barrel sensors; material: Stainless steel A2 1.4301 (AISI 304)

Wiring accessories

Dimension drawing	Type	ID	
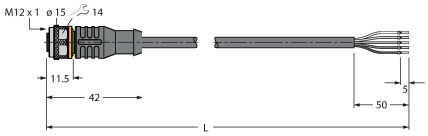	RKC4.5T-2/TEL	6625016	Connection cable, M12 female connector, straight, 5-pin, cable length: 2 m, jacket material: PVC, black; cULus approval
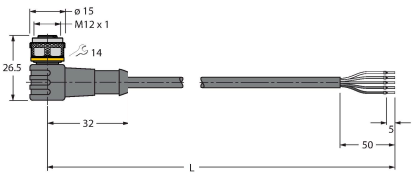	WKC4.5T-2/TEL	6625028	Connection cable, M12 female connector, angled, 5-pin, cable length: 2 m, jacket material: PVC, black; cULus approval

Accessories

Dimension drawing	Type	ID	
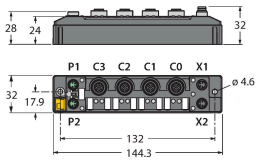	TBEN-S2-4IOL	6814024	Compact multiprotocol I/O module, 4 IO-Link Master 1.1 Class A, 4 universal PNP digital channels 0.5 A

RU100U-M18MS-AP8X2-H1151| 03/05/2025 13-55 | technical changes reserved

Dimension drawing	Type	ID	
	USB-2-IOL-0002	6825482	IO-Link Master with integrated USB port

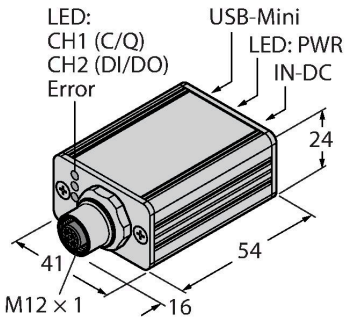

	VB2-SP1	A3501-29	Teach adapter

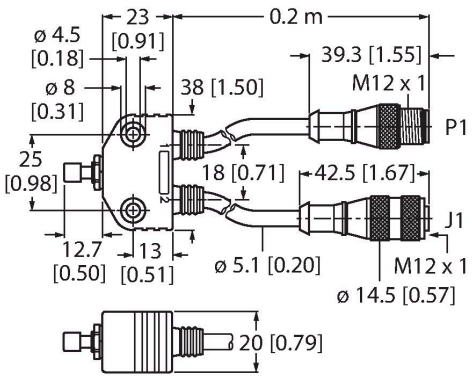

RU100U-M18MS-AP8X2-H1151| 03/05/2025 13-55 | technical changes reserved