NI40U-CK40-AP6X2-H1141
Inductive Sensor – With Increased Switching Distance

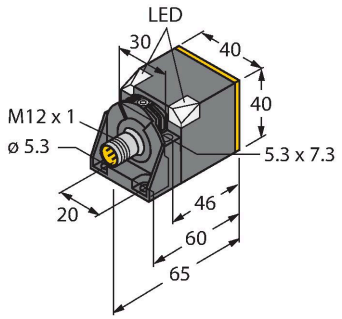

Technical data

Type	NI40U-CK40-AP6X2-H1141
Ident. no.	1623641
Rated switching distance	40 mm
Mounting conditions	Non-flush
Secured operating distance	≤ (0.81 × Sn) mm
Repeat accuracy	≤ 2 % of full scale
Temperature drift	≤ ± 10 %
	≤ ± 20 %, ≤ -25 °C v ≥ +70 °C
Hysteresis	3…15 %
Ambient temperature	-30…+85 °C
Operating voltage	10…30 VDC
Residual ripple	≤ 10 % U_{ss}
DC rated operational current	≤ 200 mA
No-load current	≤ 15 mA
Residual current	≤ 0.1 mA
Isolation test voltage	≤ 0.5 kV
Short-circuit protection	yes / Cyclic
Voltage drop at I_e	≤ 1.8 V
Wire breakage/Reverse polarity protection	yes / Complete
Output function	3-wire, NO contact, PNP
Insulation class	⧈
Switching frequency	0.25 kHz
Design	Rectangular, CK40
Dimensions	65 x 40 x 40 mm

Features

- Rectangular, height 40 mm
- Variable orientation of active face in 5 directions
- Plastic, PBT-GF30-V0
- High luminance corner LEDs
- Optimum view on supply voltage and switching state from any position
- Factor 1 for all metals
- Increased switching distance
- Protection class IP68
- Large coverage
- Resistant to magnetic fields
- Extended temperature range
- High switching frequency
- DC 3-wire, 10…30 VDC
- NO contact, PNP output
- M12 x 1 male connector

Wiring diagram

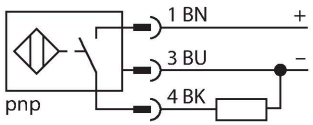

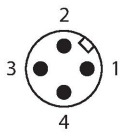

Functional principle

Inductive sensors are designed for wear-free and contactless detection of metal objects. uprox Factor 1 sensors have significant advantages due to their patented ferrite-coreless multi-coil system. They detect all metals at the same large switching distance and are resistant to magnetic fields.

NI40U-CK40-AP6X2-H1141| 09/09/2020 15-07 | technical changes reserved

Technical data

	variable orientation of active face in 5 directions
Housing material	Plastic, PBT-GF20-V0, Black
Active area material	Plastic, PA12-GF30, yellow
Electrical connection	Connector, M12 × 1
Vibration resistance	55 Hz (1 mm)
Shock resistance	30 g (11 ms)
Protection class	IP68
MTTF	874 years acc. to SN 29500 (Ed. 99) 40 °C
Power-on indication	2 × LEDs, Green
Switching state	2 × LEDs, Yellow
Included in delivery	Fixing clamp BS4-CK40

Mounting instructions

Mounting instructions/Description

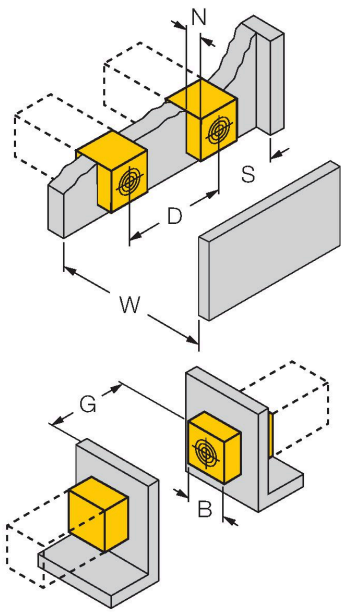

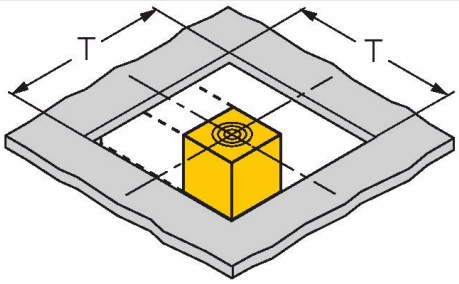

Distance D	240 mm
Distance W	120 mm
Distance S	60 mm
Distance G	240 mm
Distance N	40 mm
Width active area B	40 mm

Flush mounting
1-side mounting: Sr = 30 mm; D = 240 mm
2-side mounting: Sr = 24 mm; D = 240 mm
3-side mounting: Sr = 19 mm; D = 80 mm
4-side mounting: Sr = 12 mm; D = 60 mm

Backside as well as recessed mounting with reduced switching distance

Recessed mounting in metal:
x = 10 mm: Sr = 20 mm
x = 20 mm: Sr = 20 mm
x = 30 mm: Sr = 20 mm
x = 40 mm: Sr = 20 mm

Protruded mounting:
y = 10 mm: Sr = 30 mm
y = 20 mm: Sr = 40 mm
y = 30 mm: Sr = 40 mm
y = 40 mm: Sr = 40 mm

Mounting in aperture plate:
T = 140 mm:
Sensor with twisted turning angle
On metal Sr = 40 mm
Metal-enclosed on one side Sr = 30mm
Metal-enclosed on two sides Sr = 20mm
Metal-enclosed on three sides Sr = 15 mm

NI40U-CK40-AP6X2-H1141| 09/09/2020 15-07 | technical changes reserved

The values stated relate to a 1 mm thick steel plate.

Accessories

BSS-CP40	6901318

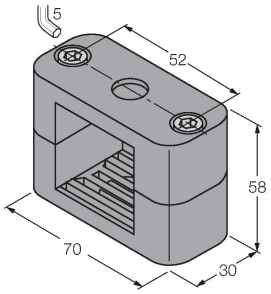

Mounting clamp for rectangular housings 40 x 40 mm; material: Polypropylene

Wiring accessories

Dimension drawing	Type	Ident. no.	
	RKC4T-2/TEL	6625010	Connection cable, female M12, straight, 3-pin, cable length: 2 m, sheath material: PVC, black; cULus approval; other cable lengths and qualities available, see www.turck.com



NI40U-CK40-AP6X2-H1141| 09/09/2020 15-07 | technical changes reserved