NI50U-CP40-AP6X2
Inductive Sensor

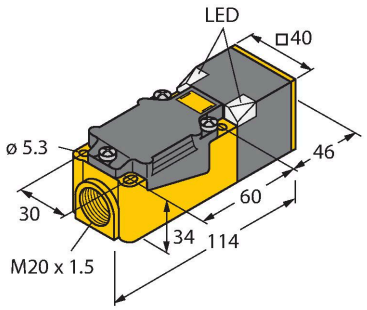

Technical data

Type	NI50U-CP40-AP6X2
Ident. no.	1625831
Rated switching distance	50 mm
Mounting conditions	Non-flush, flush
Secured operating distance	≤ (0.81 × Sn) mm
Repeat accuracy	≤ 2 % of full scale
Temperature drift	≤ ± 10 %
	≤ ± 20 %, ≤ -25 °C v ≥ +70 °C
Hysteresis	3…15 %
Ambient temperature	-30…+85 °C
Operating voltage	10…30 VDC
Residual ripple	≤ 10 % U_{ss}
DC rated operational current	≤ 200 mA
No-load current	≤ 15 mA
Residual current	≤ 0.1 mA
Isolation test voltage	≤ 0.5 kV
Short-circuit protection	yes / Cyclic
Voltage drop at I_e	≤ 1.8 V
Wire breakage/Reverse polarity protection	yes / Complete
Output function	3-wire, NO contact, PNP
Insulation class	⧈
Switching frequency	0.25 kHz
Design	Rectangular, CP40
Dimensions	114 x 40 x 40 mm

Features

- Rectangular, height 40 mm
- Variable orientation of active face in 9 directions
- Plastic, PBT-GF30-V0
- High luminance corner LEDs
- Optimum view on supply voltage and switching state from any position
- Factor 1 for all metals
- Increased switching distance
- Protection class IP68
- Resistant to magnetic fields
- Auto-compensation protects against pre-damping
- Partially embeddable
- DC 3-wire, 10…30 VDC
- NO contact, PNP output
- Terminal chamber

Wiring diagram

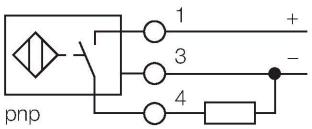

Functional principle

Inductive sensors are designed for wear-free and contactless detection of metal objects. uprox+ sensors have significant advantages due to their patented multi-coil system. They excel thanks to their optimum switching distances, maximum flexibility and operational reliability as well as efficient standardization.

NI50U-CP40-AP6X2| 09/09/2020 15-09 | technical changes reserved

Technical data

Housing material	Plastic, PBT-GF30-V0, Black
Active area material	Plastic, PA6-GF30-X, yellow
Electrical connection	Terminal chamber
Clamping ability	≤ 2.5 mm²
Vibration resistance	55 Hz (1 mm)
Shock resistance	30 g (11 ms)
Protection class	IP68
MTTF	874 years acc. to SN 29500 (Ed. 99) 40 °C
Power-on indication	2 × LEDs, Green
Switching state	2 × LEDs, Yellow

NI50U-CP40-AP6X2| 09/09/2020 15-09 | technical changes reserved

Mounting instructions

Mounting instructions/Description

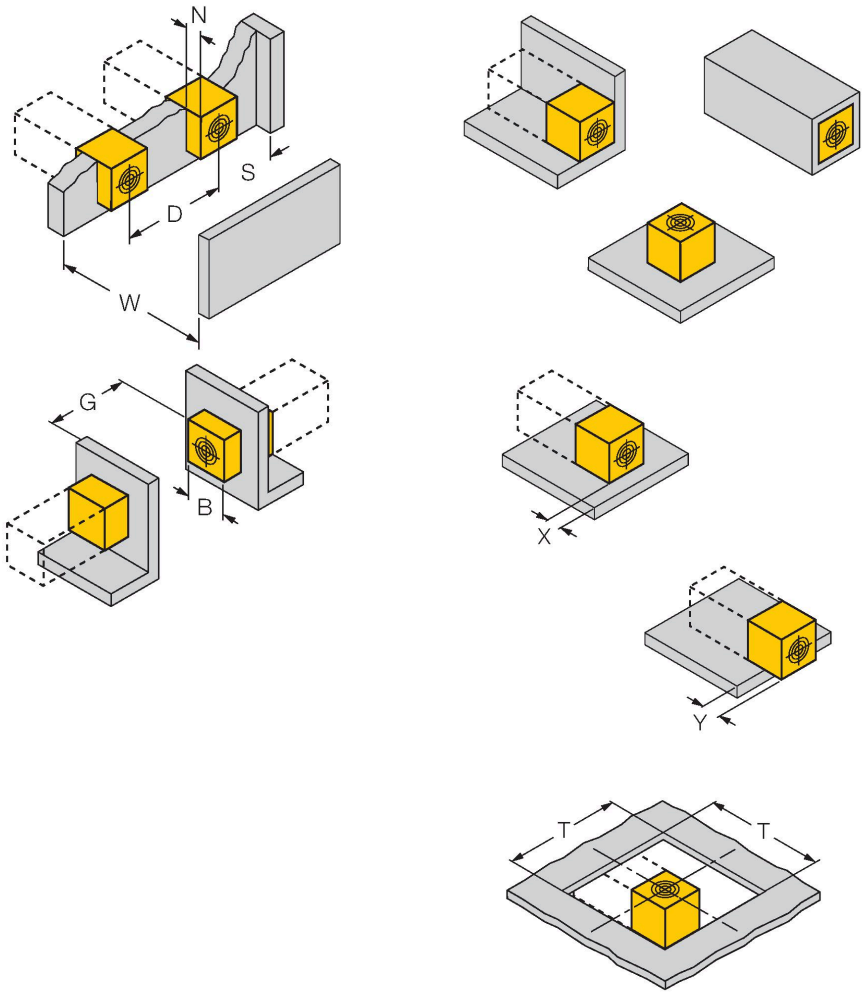

Distance D	240 mm
Distance W	105 mm
Distance S	60 mm
Distance G	300 mm
Distance N	30 mm
Width active area B	40 mm

Flush mounting
1-side mounting: Sr = 35 mm; D = 240 mm
2-side mounting: Sr = 25 mm; D = 240 mm
3-side mounting: Sr = 20 mm; D = 80 mm
4-side mounting: Sr = 17 mm; D = 60 mm

Backside and recessed mounting with reduced switching distance

Recessed mounting in metal:
x = 10 mm: Sr = 20 mm
x = 20 mm: Sr = 20 mm
x = 30 mm: Sr = 20 mm
x = 40 mm: Sr = 20 mm

Protruded mounting:
y = 10 mm: Sr = 40 mm
y = 20 mm: Sr = 50 mm
y = 30 mm: Sr = 50 mm
y = 40 mm: Sr = 50 mm

Mounting position in aperture plate:
T = 150 mm
Twisted mounting position
On metal Sr = 50 mm
Metal-enclosed on one side Sr = 25 mm
Metal-enclosed on two sides Sr = 15 mm
Metal-enclosed on three sides Sr = 12 mm

The values stated relate to a 1 mm thick steel plate.

Accessories

STRM M20X1.5 SCHWARZ	6965902

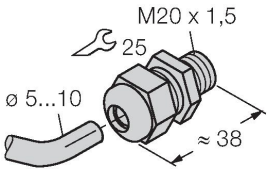

M20 × 1.5 cable gland

Adjusting bar JS 025/037	69429

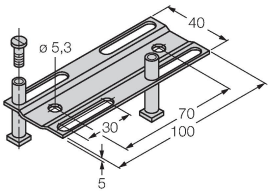

Adjusting bar for rectangular housings CK/CP40; material: VA 1.4301

NI50U-CP40-AP6X2| 09/09/2020 15-09 | technical changes reserved

BSS-CP40	6901318

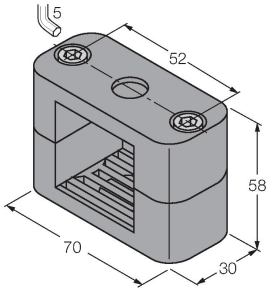

Mounting clamp for rectangular housings 40 x 40 mm; material: Polypropylene

NI50U-CP40-AP6X2| 09/09/2020 15-09 | technical changes reserved