BI20U-CA40-AP6X2-0.2-RS4/S1590/XOR
Inductive sensor – With WeldGuard™ coating

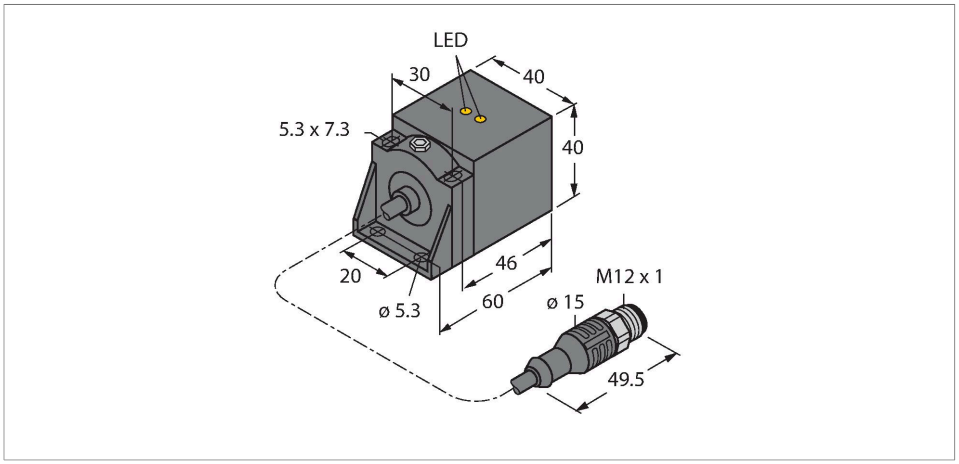

Technical data

Type	BI20U-CA40-AP6X2-0.2-RS4/S1590/XOR
Ident. no.	1627218
Special version	S1590 corresponds to: WeldGuard™ coating
Rated switching distance	20 mm
Mounting conditions	Flush
Secured operating distance	≤ (0.81 × Sn) mm
Repeat accuracy	≤ 2 % of full scale
Temperature drift	≤ ± 10 %
	≤ ± 15 %, ≤ -25 °C v ≥ +70 °C
Hysteresis	3…15 %
Ambient temperature	0…+70 °C
Operating voltage	10…30 VDC
Residual ripple	≤ 10 % U_{ss}
DC rated operational current	≤ 200 mA
No-load current	≤ 15 mA
Residual current	≤ 0.1 mA
Isolation test voltage	≤ 0.5 kV
Short-circuit protection	yes / Cyclic
Voltage drop at I_e	≤ 1.8 V
Wire breakage/Reverse polarity protection	yes / Complete
Output function	3-wire, NO contact, PNP
Insulation class	⧈
Switching frequency	0.25 kHz

Features

- Rectangular, height 40 mm
- Variable orientation of active face in 5 directions
- Sensor housing GD-ALSI 12
- Front cap with special coating, very resistant to thermal and mechanical load
- Factor 1 for all metals
- Protection class IP67
- Resistant to magnetic fields
- DC 3-wire, 10…30 VDC
- NO contact, PNP output
- Pigtail with male end M12 x 1

Wiring diagram

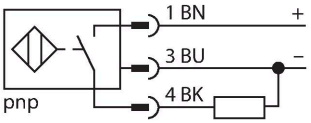

Functional principle

Inductive sensors detect metal objects contactless and wear-free. For this purpose they use a high-frequency electromagnetic AC field that interacts with the target. The sensors hosting a ferrite core coil generate the AC field through an LC resonant circuit.
Turck WeldGuard sensors are equipped with a thin coating made of thermosetting plastic. This high-tech coating is resistant to abrasion and withstands mechanical stress, as occuring for example in welding systems.

BI20U-CA40-AP6X2-0.2-RS4/S1590/XOR 03/07/2020 09-08 | technical changes reserved

Technical data

Design	Rectangular, CA40
Dimensions	65 x 40 x 40 mm
	variable orientation of active face in 5 directions
Housing material	Metal, GD-AlSi 12
Active area material	Plastic, PA6-GF30, black
Material coupling nut	metal, 1.4404
Electrical connection	Cable with connector, M12 × 1
Cable quality	Ø 5.2 mm, LifXX, PVC, 0.2 m
Core cross-section	3 x 0.34 mm²
Vibration resistance	55 Hz (1 mm)
Shock resistance	30 g (11 ms)
Protection class	IP67
Power-on indication	LED,Green
Switching state	LED, Yellow
Included in delivery	BS1-CK40

Mounting instructions

Mounting instructions/Description

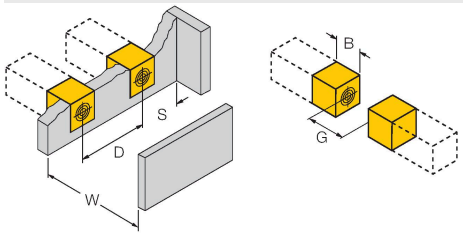

Distance D	3 x B
Distance W	3 x Sn
Distance S	1.5 x B
Distance G	6 x Sn
Width active area B	40 mm

Accessories

BSS-CP40	**6901318**

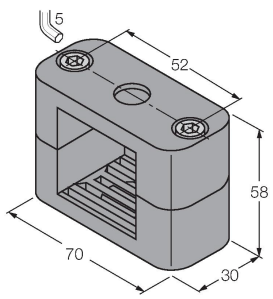

Mounting clamp for rectangular housings 40 x 40 mm; material: Polypropylene

BI20U-CA40-AP6X2-0.2-RS4/S1590/XOR 03/07/2020 09-08 | technical changes reserved