BI20U-CP40-AN6X2
Inductive Sensor

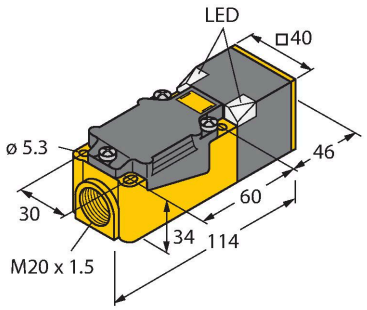

Technical data

Type	BI20U-CP40-AN6X2
Ident. no.	1627230
Rated switching distance	20 mm
Mounting conditions	Flush
Secured operating distance	≤ (0.81 × Sn) mm
Repeat accuracy	≤ 2 % of full scale
Temperature drift	≤ ± 10 %
Hysteresis	3…15 %
Ambient temperature	-30…+85 °C
Operating voltage	10…30 VDC
Residual ripple	≤ 10 % U_{ss}
DC rated operational current	≤ 200 mA
No-load current	≤ 15 mA
Residual current	≤ 0.1 mA
Isolation test voltage	≤ 0.5 kV
Short-circuit protection	yes / Cyclic
Voltage drop at I_e	≤ 1.8 V
Wire breakage/Reverse polarity protection	yes / Complete
Output function	3-wire, NO contact, NPN
Insulation class	⧈
Switching frequency	0.25 kHz
Design	Rectangular, CP40
Dimensions	114 x 40 x 40 mm
Housing material	Plastic, PBT-GF30-V0, Black

Features

- Rectangular, height 40 mm
- Variable orientation of active face in 9 directions
- Plastic, PBT-GF30-V0
- High luminance corner LEDs
- Optimum view on supply voltage and switching state from any position
- Factor 1 for all metals
- Protection class IP68
- Resistant to magnetic fields
- Large coverage
- High switching frequency
- DC 3-wire, 10…30 VDC
- NO contact, NPN output
- Terminal chamber

Wiring diagram

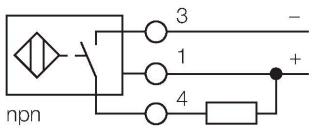

Functional principle

Inductive sensors are designed for wear-free and contactless detection of metal objects. uprox+ sensors have significant advantages due to their patented multi-coil system. They excel thanks to their optimum switching distances, maximum flexibility and operational reliability as well as efficient standardization.

BI20U-CP40-AN6X2| 09/09/2020 15-10 | technical changes reserved

Technical data

Active area material	Plastic, PA6-GF30-X, yellow
Electrical connection	Terminal chamber
Clamping ability	≤ 2.5 mm²
Vibration resistance	55 Hz (1 mm)
Shock resistance	30 g (11 ms)
Protection class	IP68
MTTF	874 years acc. to SN 29500 (Ed. 99) 40 °C
Power-on indication	2 × LEDs, Green
Switching state	2 × LEDs, Yellow

Mounting instructions

Mounting instructions/Description

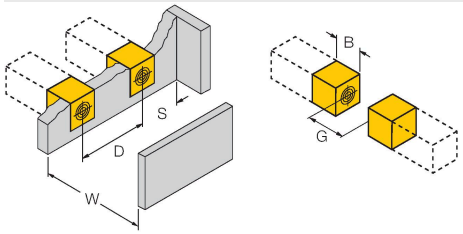

Distance D	80 mm
Distance W	60 mm
Distance S	40 mm
Distance G	120 mm
Width active area B	40 mm

Accessories

STRM M20X1.5 SCHWARZ 6965902

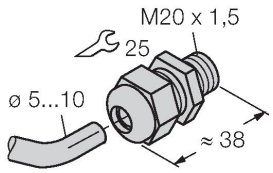

M20 × 1.5 cable gland

BSS-CP40 6901318

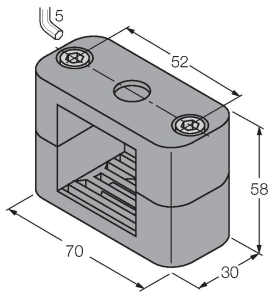

Mounting clamp for rectangular housings 40 x 40 mm; material: Polypropylene

Adjusting bar JS 025/037 69429

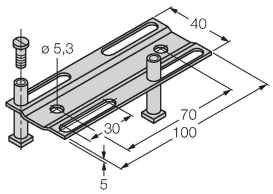

Adjusting bar for rectangular housings CK/CP40; material: VA 1.4301

BI20U-CP40-AN6X2| 09/09/2020 15-10 | technical changes reserved