NI8U-EM12-AP6X 7M
Inductive Sensor

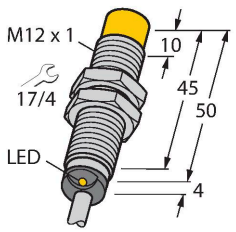

Technical data

Type	NI8U-EM12-AP6X 7M
ID	1644306
General data	
Rated switching distance	8 mm
Mounting conditions	Non-flush, partially embeddable
Secured operating distance	≤ (0.81 × Sn) mm
Repeat accuracy	≤ 2 % of full scale
Temperature drift	≤ ±10 %
	≤ ± 20 %, ≤ -25 °C v ≥ +70 °C
Hysteresis	3…15 %
Electrical data	
Operating voltage	10…30 VDC
Residual ripple	≤ 10 % U_{ss}
DC rated operational current	≤ 200 mA
No-load current	25 mA
Residual current	≤ 0.1 mA
Isolation test voltage	≤ 0.5 kV
Short-circuit protection	yes / Cyclic
Voltage drop at I_e	≤ 1.8 V
Wire breakage/Reverse polarity protection	yes / Complete
Output function	3-wire, NO contact, PNP
DC field stability	300 mT
AC field stability	300 mT_{ss}
Insulation class	⧈

Features

- Threaded barrel, M12 x 1
- Stainless steel, 1.4301
- Factor 1 for all metals
- Protection class IP68
- Resistant to magnetic fields
- Extended temperature range
- High switching frequency
- Auto-compensation protects against pre-damping
- DC 3-wire, 10…30 VDC
- NO contact, PNP output
- Cable connection

Wiring diagram

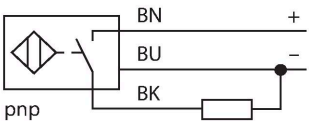

Functional principle

Inductive sensors are designed for wear-free and contactless detection of metal objects. uprox Factor 1 sensors have significant advantages due to their patented ferrite-coreless multi-coil system. They detect all metals at the same large switching distance and are resistant to magnetic fields.

NI8U-EM12-AP6X 7MI 11/29/2022 08-35 | technical changes reserved

Technical data

Switching frequency	1 kHz
Mechanical data	
Design	Threaded barrel, M12 × 1
Dimensions	54 mm
Housing material	Stainless steel, 1.4301 (AISI 304)
Active area material	Plastic, PBT
End cap	Plastic, EPTR
Max. tightening torque of housing nut	10 Nm
Electrical connection	Cable
Cable quality	Ø 5.2 mm, LifYY, PVC, 7 m
Core cross-section	3 x 0.34 mm^2
Environmental conditions	
Ambient temperature	-30…+85 °C
Vibration resistance	55 Hz (1 mm)
Shock resistance	30 g (11 ms)
Protection class	IP68
MTTF	874 years acc. to SN 29500 (Ed. 99) 40 °C
Switching state	LED, Yellow

NI8U-EM12-AP6X 7M| 11/29/2022 08-35 | technical changes reserved

Mounting instructions

Mounting instructions/Description

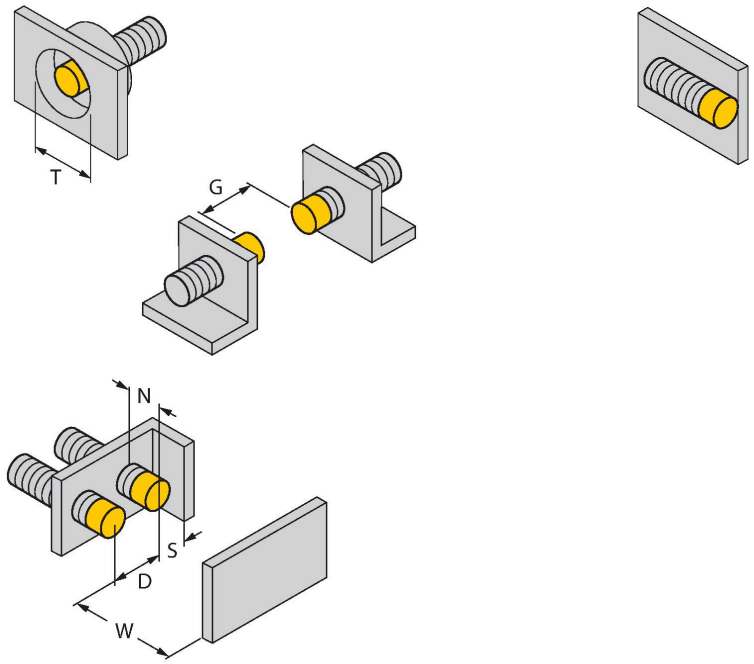

Distance D	3 x B
Distance W	3 x Sn
Distance T	4 x B
Distance S	1.5 x B
Distance G	6 x Sn
Distance N	2 x Sn
Diameter active area B	Ø 12 mm

1-side flush mounting possible:
1-side flush mounting: Sr = 6 mm

Accessories

BST-12B	6947212

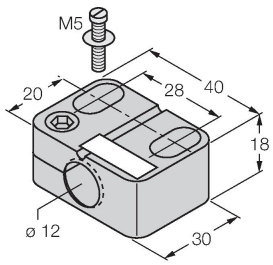

Mounting clamp for threaded barrel sensors, with dead-stop; material: PA6

BSS-12	6901321

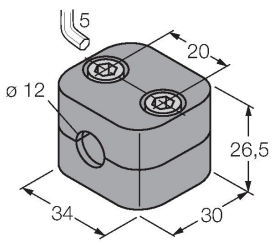

Mounting clamp for smooth and threaded barrel sensors; material: Polypropylene

MW-12	6945003

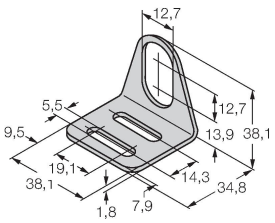

Mounting bracket for threaded barrel sensors; material: Stainless steel A2 1.4301 (AISI 304)

NI8U-EM12-AP6X 7M| 11/29/2022 08-35 | technical changes reserved