# BI20U-M30-VP6X 7M
# Inductive Sensor

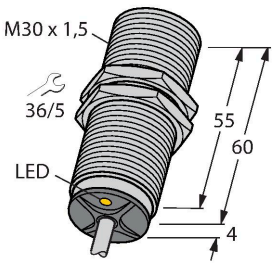


## Technical data

| | |
|---|---|
| Type | BI20U-M30-VP6X 7M |
| Ident. no. | 1644887 |
| Rated switching distance | 20 mm |
| Mounting conditions | Flush |
| Secured operating distance | ≤ (0.81 × Sn) mm |
| Repeat accuracy | ≤ 2 % of full scale |
| Temperature drift | ≤ ± 10 % |
| Hysteresis | 3…15 % |
| Ambient temperature | -25…+70 °C |
| Operating voltage | 10…30 VDC |
| Residual ripple | ≤ 10 % $U_{ss}$ |
| DC rated operational current | ≤ 200 mA |
| No-load current | ≤ 20 mA |
| Residual current | ≤ 0.1 mA |
| Isolation test voltage | ≤ 0.5 kV |
| Short-circuit protection | yes / Cyclic |
| Voltage drop at $I_e$ | ≤ 1.8 V |
| Wire breakage/Reverse polarity protection | yes / Complete |
| Output function | 4-wire, Complementary contact, PNP |
| Switching frequency | 1 kHz |
| Design | Threaded barrel, M30 × 1.5 |
| Dimensions | 64 mm |
| Housing material | Metal, CuZn, Chrome-plated |
| Active area material | Plastic, LCP |

## Features

- M30 × 1.5 threaded tube
- Chrome-plated brass
- Factor 1 for all metals
- Resistant to magnetic fields
- Large switching distance
- DC 4-wire, 10…30 VDC
- Changeover contact, PNP output
- Cable connection

## Wiring diagram

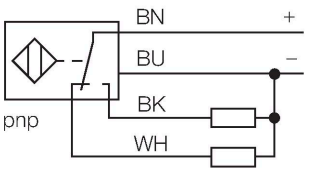


## Functional principle

Inductive sensors are designed for wear-free and contactless detection of metal objects. uprox3 sensors have significant advantages due to their patented multi-coil system. They excel thanks to their optimum switching distances, maximum flexibility and operational reliability as well as efficient standardization.

BI20U-M30-VP6X 7M| 09/09/2020 16-09 | technical changes reserved

## Technical data

| | |
|---|---|
| End cap | Plastic, EPTR |
| Max. tightening torque housing nut | 50 Nm |
| Electrical connection | Cable |
| Cable quality | Ø 5.2 mm, Gray, LifYY, PVC, 7 m |
| Core cross-section | 4 x 0.34 mm² |
| Vibration resistance | 55 Hz (1 mm) |
| Shock resistance | 30 g (11 ms) |
| Protection class | IP68 |
| MTTF | 874 years acc. to SN 29500 (Ed. 99) 40 °C |
| Switching state | LED, Yellow |

## Mounting instructions

Mounting instructions/Description

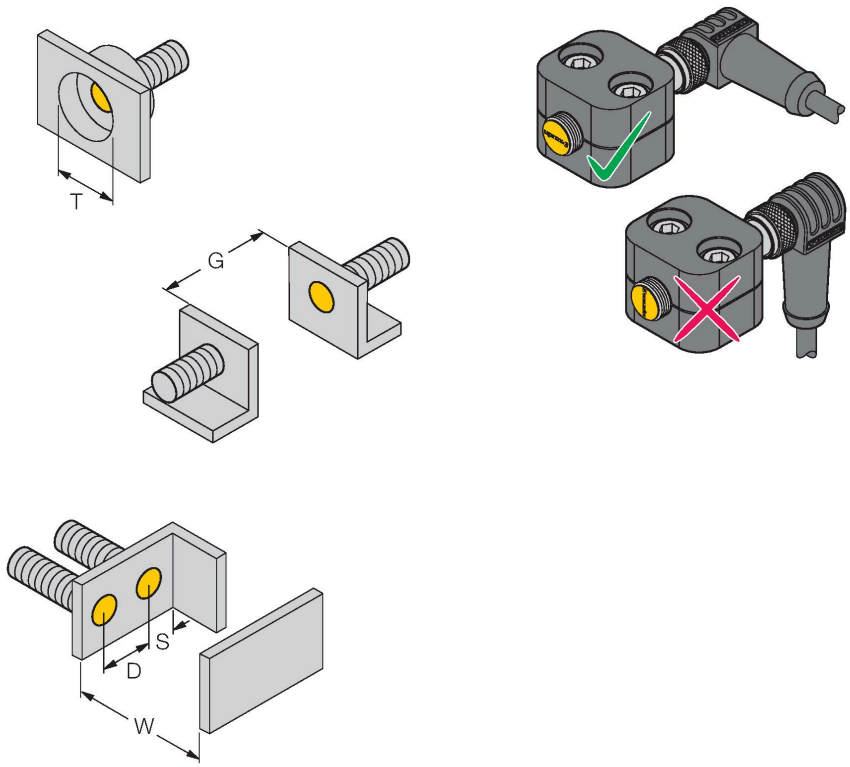


| | |
|---|---|
| Distance D | 60 mm |
| Distance W | 3 x Sn |
| Distance T | 3 x B |
| Distance S | 1.5 x B |
| Distance G | 6 x Sn |
| Diameter active area B | Ø 30 mm |

When installing the sensor in combination with the illustrated half-shell-clamp, observe its correct alignment towards the clamp. For this, see the uprox-lettering on the front cap of the sensor and the adjacent installation drawing.

BI20U-M30-VP6X 7M| 09/09/2020 16-09 | technical changes reserved

## Accessories

| BST-30B | 6947216 |
|---|---|

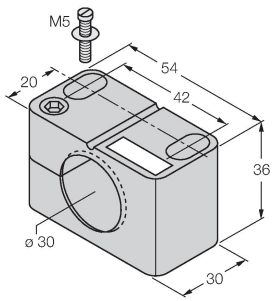


Mounting clamp for threaded barrel sensors, with dead-stop; material: PA6

| BSS-30 | 6901319 |
|---|---|

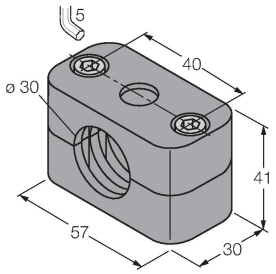


Mounting clamp for smooth and threaded barrel sensors; material: Polypropylene

| MW-30 | 6945005 |
|---|---|

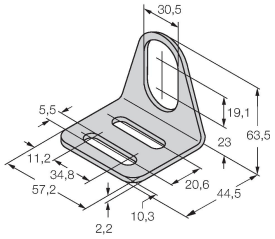


Mounting bracket for threaded barrel sensors; material: Stainless steel A2 1.4301 (AISI 304)

BI20U-M30-VP6X 7M| 09/09/2020 16-09 | technical changes reserved