BID1.5-G120-AP6-H1141
Inductive Sensor – For High Pressures

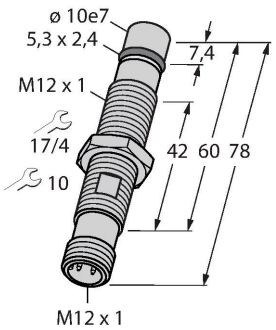

Features

- Threaded barrel, M12 x 1
- Stainless steel, 1.4301
- Admissible static pressure 500 bar
- Admissible peak pressure 1000 bar
- Suitable for use in high vacuum
- DC 3-wire, 10…30 VDC
- NO contact, PNP output
- M12 x 1 male connector

Technical data

Type	BID1.5-G120-AP6-H1141
ID	1682000
General data	
Rated switching distance	1.5 mm
Mounting conditions	Flush
Secured operating distance	≤ (0.81 × Sn) mm
Correction factors	St37 = 1; Al = 0.32; Cu = 0.27; Ms = 0.45; stainless steel = 0.75
Repeat accuracy	≤ 7 % of full scale
Static pressure	≤ 500 bar
Dynamic pressure	≤ 500 bar
Vacuum-tight up to	10^{-8} Torr
Temperature drift	≤ ±15 %
Hysteresis	3 %
Electrical data	
Operating voltage	10…30 VDC
Residual ripple	≤ 20 % U_{ss}
DC rated operational current	≤ 200 mA
No-load current	10 mA
Residual current	≤ 0.1 mA
Isolation test voltage	≤ 0.5 kV
Short-circuit protection	yes / Cyclic
Voltage drop at I_e	≤ 2 V
Wire breakage/Reverse polarity protection	yes / Complete

Wiring diagram

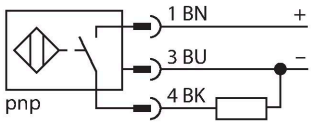

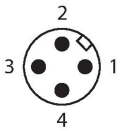

Functional principle

Inductive sensors detect metal objects contactless and wear-free. For this, they use a high-frequency electromagnetic AC field that interacts with the target. This field is generated by an LC resonant circuit with a ferrite core. Pressure resistant inductive sensors withstand pressures of up to 1000 bar which makes them perfectly suited for position control in hydraulic cylinders.

BID1.5-G120-AP6-H1141| 11/29/2022 08-22 | technical changes reserved

Technical data

Output function	3-wire, NO contact, PNP
Switching frequency	0.6 kHz
Mechanical data	
Design	Threaded barrel, M12 × 1
Dimensions	78 mm
Housing material	Stainless steel, 1.4305 (AISI 303)
Active area material	Plastic, ZrO_2
Max. tightening torque of housing nut	40 Nm
Electrical connection	Connector, M12 × 1
Environmental conditions	
Ambient temperature	-25…+80 °C
Vibration resistance	55 Hz (1 mm)
Shock resistance	30 g (11 ms)
Protection class	IP68
MTTF	1053 years acc. to SN 29500 (Ed. 99) 30 °C

Mounting instructions

Mounting instructions/Description

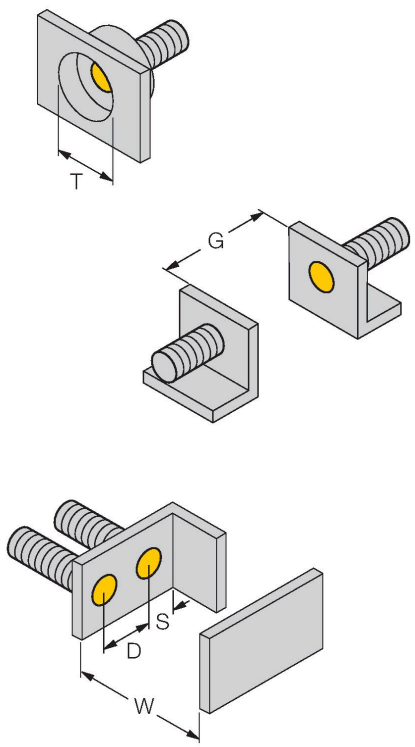

Distance D	3 × B
Distance W	3 x Sn
Distance T	3 x B
Distance S	1.5 x B
Distance G	6 x Sn
Diameter active area B	Ø 12 mm

BID1.5-G120-AP6-H1141| 11/29/2022 08-22 | technical changes reserved