BID2-G180-AP6-H1141/S220
Inductive Sensor – For High Pressures

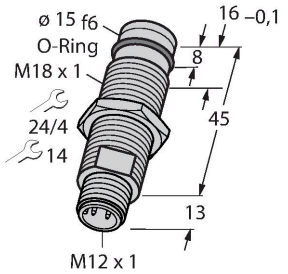

Technical data

Type	BID2-G180-AP6-H1141/S220
Ident. no.	1688501
Special version	S220 corresponds to: encapsulated oscillator head
Rated switching distance	2 mm
Mounting conditions	Flush
Secured operating distance	≤ (0.81 × Sn) mm
Correction factors	St37 = 1; Al = 0.3; stainless steel = 0.7; Ms = 0.4
Repeat accuracy	≤ 2 % of full scale
Static pressure	≤ 100 bar
Dynamic pressure	≤ 60 bar
Admissible contact medium	electrically conductive
Temperature drift	≤ ± 10 %
Hysteresis	3…15 %
Ambient temperature	-25…+70 °C
Operating voltage	10…30 VDC
Residual ripple	≤ 10 % U_{ss}
DC rated operational current	≤ 200 mA
No-load current	≤ 15 mA
Residual current	≤ 0.1 mA
Isolation test voltage	≤ 0.5 kV
Short-circuit protection	yes / Cyclic
Voltage drop at I_e	≤ 1.8 V
Wire breakage/Reverse polarity protection	yes / Complete

Features

- Threaded barrel, M18 x 1
- Stainless steel, 1.4305
- admissible static pressure 100 bar
- DC 3-wire, 10…30 VDC
- NO contact, PNP output
- M12 x 1 male connector

Wiring diagram

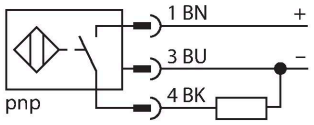

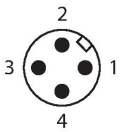

Functional principle

Inductive sensors detect metal objects contactless and wear-free. For this purpose they use a high-frequency electromagnetic AC field that interacts with the target. The sensors hosting a ferrite core coil generate the AC field through an LC resonant circuit.
Pressure-resistant inductive sensors withstand high pressures which makes them perfectly suited for position control in hydraulic cylinders.

BID2-G180-AP6-H1141/S220| 09/09/2020 15-31 | technical changes reserved

Technical data

Output function	3-wire, NO contact, PNP
Switching frequency	2 kHz
Design	Threaded barrel, M18 × 1
Dimensions	58 mm
Housing material	Metal, 1.4305 (AISI 303)
Active area material	Plastic, PA12-GF30
Max. tightening torque housing nut	25 Nm
Electrical connection	Connector, M12 × 1
Vibration resistance	55 Hz (1 mm)
Shock resistance	30 g (11 ms)
Protection class	IP67

Mounting instructions

Mounting instructions/Description

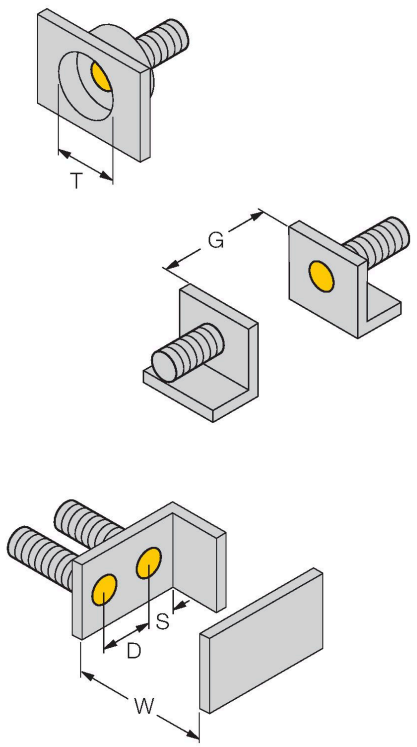

Distance D	2 x B
Distance W	3 x Sn
Distance T	3 x B
Distance S	1.5 x B
Distance G	6 x Sn
Diameter active area B	Ø 18 mm

BID2-G180-AP6-H1141/S220| 09/09/2020 15-31 | technical changes reserved

Wiring accessories

Dimension drawing	Type	Ident. no.	
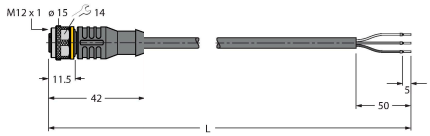	RKC4T-2/TEL	6625010	Connection cable, female M12, straight, 3-pin, cable length: 2 m, sheath material: PVC, black; cULus approval; other cable lengths and qualities available, see www.turck.com

BID2-G180-AP6-H1141/S220| 09/09/2020 15-31 | technical changes reserved