EKWP-A4.400-XR8Y-15
Actuator and Sensor Cable – Connection Cable

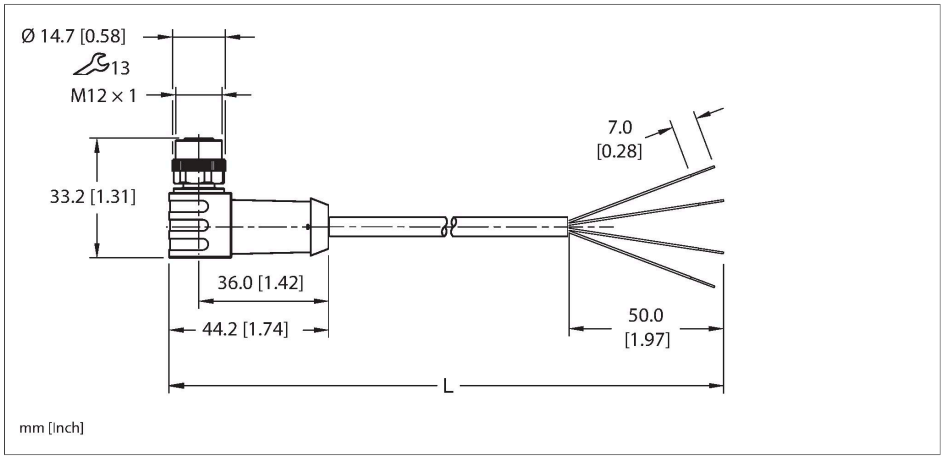

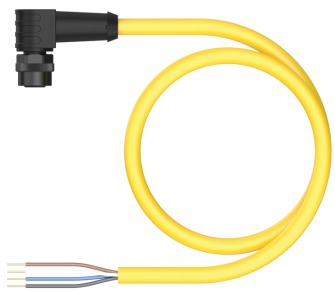

Technical data

Type	EKWP-A4.400-XR8Y-15
ID	200002253
Replaces	WKEK 4.4T-x/S600
Connector A	Female, M12 × 1, Right angle, A-code
Design specification	Acc. to IEC 61076-2-101
Number of contacts	4
Contacts	Bronze, CuSn, Gold-plated
Contact carriers	Plastic, Nylon or TPU, Black
Connector body	Plastic, TPU, Black
Coupling nut	Plastic, POM, Black
Connector seal	O-ring, Plastic, FKM/FPM
Tightening torque (range)	0.4 … 1.8 Nm (note max. torque of mating connector!)
Mechanical life	> 100 Mating cycles
Pollution degree	3
Protection class (When coupled)	IP67, IP68, IP69, IP69K
	NEMA: 1, 3, 4, 6P, 12
Cable data	
Cable ID	RF50644
Total number of conductors	4
Cable diameter	Ø 8.51 mm
Length (L)	15 m, (+50mm or 4% of length/-0.0, Whichever is greater)
Cable jacket	CPE, Yellow
Conductor diameter	0.11 "

Features

- M12, Female, Right angle, 4-pin
- Flexible Service Cable
- Yellow CPE jacket, 4X18 AWG
- Sunlight Resistant
- -40 Cold Bend Rating
- Oil Resistant
- Flame Ratings: UL 1060, CSA FT1

Cable cross section

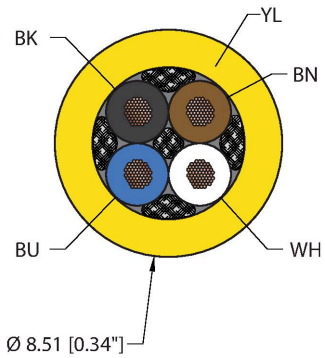

Contact assignment

EKWP-A4.400-XR8Y-15| 11/12/2025 21-19 | technical changes reserved

Technical data

Conductor material	BC (bare copper)
Conductor insulation material	EPDM
Conductor size	4 x 18 AWG [Similar to 0.75 mm²]
Number of strands x O.D.	41 x 34 AWG
Conductor colors	BN, WH, BU, BK
Electrical properties at +20 °C	
Rated voltage	250 V_{AC}/300 V_{DC}
Current	5 A
Mechanical and chemical properties	
Bending radius (static)	≥ 5 x Ø
Bending radius (dynamic)	≥ 10 x Ø
UL cold bend rating	-40 °C
Ambient temperature range (static)	-40…+105 °C
Ambient temperature range (dynamic)	5…+105 °C
Temperature range (installation)	-10…+105 °C
Approval	
Approvals	UL 2238 CSA C22.2 No. 182.3 CE UKCA RoHS
Note	
	- Flex ratings may be reduced if used in extreme temperatures, exposure to certain chemicals, operating above the rated cycle speed, or operating below the rated cable bend radius.
	- We reserve the right to make technical alterations without prior notice.

Connector A

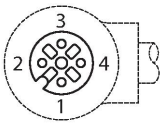

Circuit Diagram

Accessories

M12-TORQUE-SLEEVE,YELLOW(10PACK) **A900167**

10 Pack of Yellow Torque Sleeves for the new M12 cordsets. Compatible with male, female, straight and right-angled, stainless steel and nickel-plated brass coupling nuts.

TORQUE-WRENCH-SET-M12/SW13 **A900152**

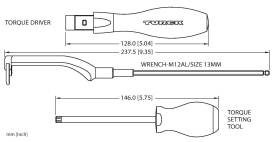

Adjustable torque driver to connect to the 13mm hex. Compatible with redesigned M12 cordsets, M12 Power, and M12 X-code. NOT Compatible with legacy M12 cordsets. Includes (1) adjustable torque driver, (1) adjustment tool, and (1) 13mm forked bit.

EKWP-A4.400-XR8Y-15| 11/12/2025 21-19 | technical changes reserved

Accessories

M12-CORDSETS-MOUNTING-CLIP-(10/BAG)	100016882

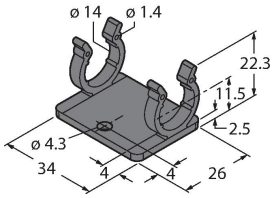

10 Pack of black mounting clips and M4x8mm mounting screws, used to secure cable to cable connection points.

EKWP-A4.400-XR8Y-15| 11/12/2025 21-19 | technical changes reserved