BC10-S30-Y1X/S90
Capacitive Sensor

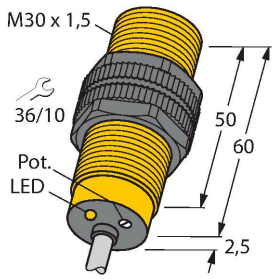

Technical data

Type	BC10-S30-Y1X/S90
Ident. no.	2010023
Special version	S90 corresponds to: With PUR cable
Rated switching distance (flush)	10 mm
Rated switching distance (non-flush)	15 mm
Secured operating distance	≤ (0.72 x Sn)
Hysteresis	1…20 %
Temperature drift	type 20 %
Repeat accuracy	≤ 2 % of full scale
Ambient temperature	-25…+70 °C
Electrical data	
Voltage	Nom. 8.2 VDC
Current consumption non-actuated	≤ 1.2 mA
Actuated current consumption	≥ 2.1 mA
Switching frequency	0.1 kHz
Output function	2-wire, NAMUR
Approvals	TIIS CSA FM IECEx NEPSI CE INMETRO KOSHA GOST ATEX

Features

- M30 × 1.5 threaded barrel
- Plastic, PA12-GF30
- Fine adjustment via potentiometer
- DC 2-wire, nom. 8.2 VDC
- Output acc. to DIN EN 60947-5-6 (NAMUR)
- Cable connection
- ATEX category II 2 G, Ex zone 1
- ATEX category II 1 D, Ex zone 20
- SIL2 (Low Demand Mode) acc. to IEC 61508, PL c acc. to ISO 13849-1 at HFT0
- SIL3 (All Demand Mode) acc. to IEC 61508, PL e acc. to ISO 13849-1 with redundant configuration HFT1

Wiring diagram

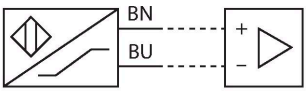

Functional principle

Capacitive proximity switches are designed for non-contact and wear-free detection of electrically conductive as well as non-conductive metal objects.

BC10-S30-Y1X/S90| 02/13/2020 16-13 | technical changes reserved

Technical data

Approval acc. to	KEMA 02 ATEX 1090X
Internal capacitance (C_i)/inductance (L_i)	150 nF/negligibly small
Device marking	Ex II 2 G Ex ia IIC T6 Gb / II 1 D Ex ia IIIC T115 °C Da
	(max. U_i = 20 V, I_i = 20 mA, P_i = 200 mW)
Mechanical data	
Design	Threaded barrel, M30 × 1.5
Dimensions	62.5 mm
Housing material	Plastic, PA12-GF30, PEI
Active area material	Plastic, PA12-GF30, yellow
Admissible pressure on front cap	≤ 3 bar
Max. tightening torque housing nut	5 Nm
Electrical connection	Cable
Cable quality	Ø 5.2 mm, Blue, LifYY-11Y, PUR, 2 m
Core cross-section	2 x 0.34 mm^2
Vibration resistance	55 Hz (1 mm)
Shock resistance	30 g (11 ms)
Protection class	IP67
MTTF	448 years acc. to SN 29500 (Ed. 99) 40 °C
Switching state	LED, Yellow

Mounting instructions

Product features

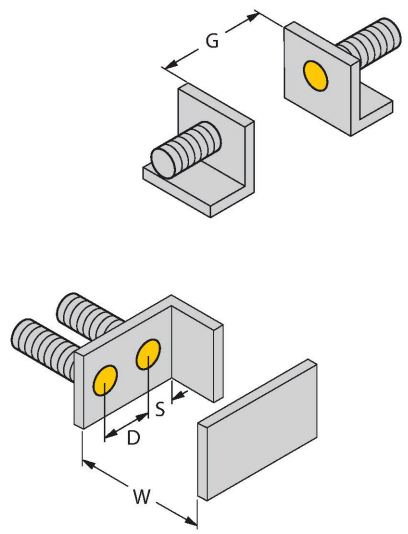

Distance D	60 mm
Distance W	30 mm
Distance S	45 mm
Distance G	60 mm
Diameter active area B	Ø 30 mm

The given minimum distances have been checked against the standard switching distance. Should the sensitivity of the sensors be changed via potentiometer, the data sheet specifications no longer apply.

BC10-S30-Y1X/S90| 02/13/2020 16-13 | technical changes reserved

Accessories

MAP-M30 **6950013**

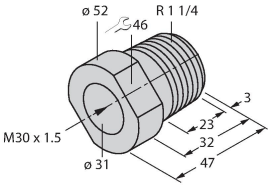

Mounting adapter; material: Polypropylene; sensor replacement with filled container possible (adapter remains in container during sensor replacement)

BST-30B **6947216**

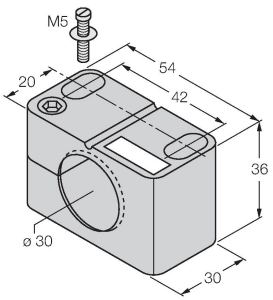

Mounting clamp for threaded barrel sensors, with dead-stop; material: PA6

IMX12-DI01-2S-2T-0/24VDC **7580020**

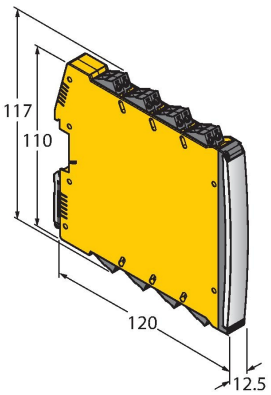

Isolating switching amplifier, 2-channel; SIL2 acc. to IEC 61508; Ex-proof version; 2 transistor outputs; input Namur signal; ON/OFF switchable monitoring of wire-break and short-circuit; toggle between NO/NC mode; signal doubling; removable screw terminals; 12.5 mm wide; 24 VDC power supply

Accessories

Accessories

BC10-S30-Y1X/S90| 02/13/2020 16-13 | technical changes reserved

Operating Instructions

Intended use

This device fulfills the directive 2014/34/EC and is suited for use in explosion hazardous areas according to EN 60079-0:2012 + A11 and EN 60079-11:2012.Further it is suited for use in safety-related systems, including SIL2 as per IEC 61508.In order to ensure correct operation to the intended purpose it is required to observe the national regulations and directives.

For use in explosion hazardous areas conform to classification

II 2 G and II 1 D (Group II, Category 2 G, electrical equipment for gaseous atmospheres and category 1 D, electrical equipment for dust atmospheres).

Marking (see device or technical data sheet)

Ex II 2 G and Ex ia IIC T6 Gb acc. to EN60079-0 and -26 und Ex II 1 D Ex ia IIIC T115°C Da acc. to EN60079-0

Local admissible ambient temperature

-25…+70 °C

Installation/Commissioning

These devices may only be installed, connected and operated by trained and qualified staff. Qualified staff must have knowledge of protection classes, directives and regulations concerning electrical equipment designed for use in explosion hazardous areas.Please verify that the classification and the marking on the device comply with the actual application conditions.

This device is only suited for connection to approved Exi circuits according to EN 60079-0 and EN 60079-11. Please observe the maximum admissible electrical values.After connection to other circuits the sensor may no longer be used in Exi installations. When interconnected to (associated) electrical equipment, it is required to perform the "Proof of intrinsic safety" (EN60079-14).Attention! When used in safety systems, all content of the security manual must be observed.

Installation and mounting instructions

Avoid static charging of cables and plastic devices. Please only clean the device with a damp cloth. Do not install the device in a dust flow and avoid build-up of dust deposits on the device.If the devices and the cable could be subject to mechanical damage, they must be protected accordingly. They must also be shielded against strong electro-magnetic fields.The pin configuration and the electrical specifications can be taken from the device marking or the technical data sheet.

Service/Maintenance

Repairs are not possible. The approval expires if the device is repaired or modified by a person other than the manufacturer. The most important data from the approval are listed.

BC10-S30-Y1X/S90| 02/13/2020 16-13 | technical changes reserved