BC20-CP40-VP4X2-H1141
Capacitive Sensor

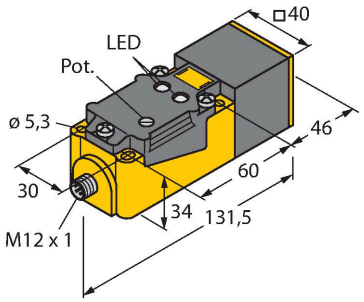

Technical data

Type	BC20-CP40-VP4X2-H1141
ID	2516002
Rated switching distance (flush)	20 mm
Rated switching distance (non-flush)	20 mm
Secured operating distance	≤ (0.72 × Sn)
Hysteresis	1…20 %
Repeat accuracy	≤ 2 % of full scale
Ambient temperature	-25…+70 °C
Electrical data	
Operating voltage	65 VDC
Residual ripple	≤ 10 % U_{ss}
DC rated operational current	≤ 200 mA
No-load current	≤ 15 mA
Residual current	≤ 0.1 mA
Switching frequency	0.1 kHz
Oscillation frequency	According to EN 60947-5-2, 8.2.6.2 Table 9: 0.1…2.0 MHz
Isolation test voltage	≤ 0.5 kV
Output function	4-wire, Complementary contact, PNP
Short-circuit protection	yes/Cyclic
Voltage drop at I_e	≤ 1.8 V
Wire break/reverse polarity protection	yes/Complete
Tests/approvals	
Approvals	UL

Features

- Rectangular, height 40 mm
- 9 sensor head positions
- Plastic, PBT-GF30-V0
- Fine adjustment via potentiometer
- DC 4-wire, 10…65 VDC
- Complementary contact, PNP output
- Terminal chamber

Wiring diagram

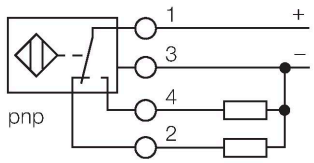

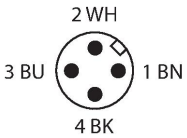

Functional principle

Capacitive proximity switches are designed for non-contact and wear-free detection of electrically conductive as well as non-conductive metal objects.

BC20-CP40-VP4X2-H1141| 04/19/2024 21-59 | technical changes reserved

Technical data

UL registration number	E210608
Mechanical data	
Design	Rectangular, CP40
Dimensions	114 x 40 x 40 mm
Housing material	Plastic, PBT-GF30-V0
Active area material	PBT-GF30-V0, yellow
Electrical connection	Terminal chamber
Vibration resistance	55 Hz (1 mm)
Shock resistance	30 g (11 ms)
Protection class	IP67
MTTF	1080 years acc. to SN 29500 (Ed. 99) 40 °C
Power-on indication	LED, Green
Switching state	LED, Yellow

Mounting instructions

Product features	
Diameter active area B	Ø 40 mm

BC20-CP40-VP4X2-H1141| 04/19/2024 21-59 | technical changes reserved