# BI2-EG12SK-Y1X
# Inductive Sensor

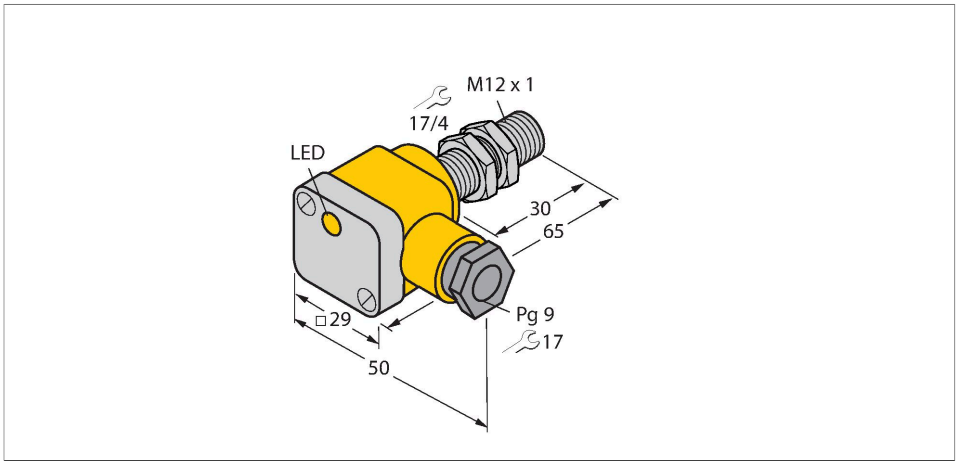


## Technical data

| | |
|---|---|
| Type | BI2-EG12SK-Y1X |
| Ident. no. | 4012050 |
| Rated switching distance | 2 mm |
| Mounting conditions | Flush |
| Secured operating distance | ≤ (0.81 × Sn) mm |
| Correction factors | St37 = 1; Al = 0.3; stainless steel = 0.7; Ms = 0.4 |
| Repeat accuracy | ≤ 2 % of full scale |
| Temperature drift | ≤ ± 10 % |
| Hysteresis | 1…10 % |
| Ambient temperature | -25…+70 °C |
| Output function | 2-wire, NAMUR |
| Switching frequency | 5 kHz |
| Voltage | Nom. 8.2 VDC |
| Non-actuated current consumption | ≥ 2.1 mA |
| Actuated current consumption | ≤ 1.2 mA |
| Approval acc. to | KEMA 02 ATEX 1090X |
| Internal capacitance ($C_i$)/inductance ($L_i$) | 150 nF/150 µH |
| Device marking | Ⓔx II 1 G Ex ia IIC T6 Ga/II 1 D Ex ia IIIC T115 °C Da |
| | (max. $U_i$ = 20 V, $I_i$ = 20 mA, $P_i$ = 200 mW) |
| Design | Threaded barrel, M12 × 1 |
| Dimensions | 65 mm |
| Housing material | Stainless steel, 1.4301 (AISI 304) |
| Terminal chamber cover material | plastic, Ultem |

## Features

- Threaded barrel, M12 x 1
- Stainless steel, 1.4301
- DC 2-wire, nom. 8.2 VDC
- Output acc. to DIN EN 60947-5-6 (NAMUR)
- Terminal chamber
- ATEX category II 1 G, Ex zone 0
- ATEX category II 1 D, Ex zone 20
- SIL2 (Low Demand Mode) acc. to IEC 61508, PL c acc. to ISO 13849-1 at HFT0
- SIL3 (All Demand Mode) acc. to IEC 61508, PL e acc. to ISO 13849-1 with redundant configuration HFT1

## Wiring diagram

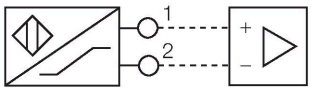


## Functional principle

Inductive sensors detect metal objects contactless and wear-free. For this, they use a high-frequency electromagnetic AC field that interacts with the target. Inductive sensors generate this field via an RLC circuit with a ferrite coil.

BI2-EG12SK-Y1X| 09/09/2020 15-32 | technical changes reserved

## Technical data

| | |
|---|---|
| Terminal chamber housing material | plastic, PA12-GF30 |
| Active area material | Plastic, PA12-GF30 |
| Max. tightening torque housing nut | 10 Nm |
| Electrical connection | Terminal chamber |
| Clamping ability | ≤ 2.5 mm² |
| Cable external diameter | 4.5…8 mm |
| Vibration resistance | 55 Hz (1 mm) |
| Shock resistance | 30 g (11 ms) |
| Protection class | IP67 |
| MTTF | 6198 years acc. to SN 29500 (Ed. 99) 40 °C |
| Switching state | LED, Yellow |
| Included in delivery | cable gland; 2x plastic seals |

## Mounting instructions

Mounting instructions/Description

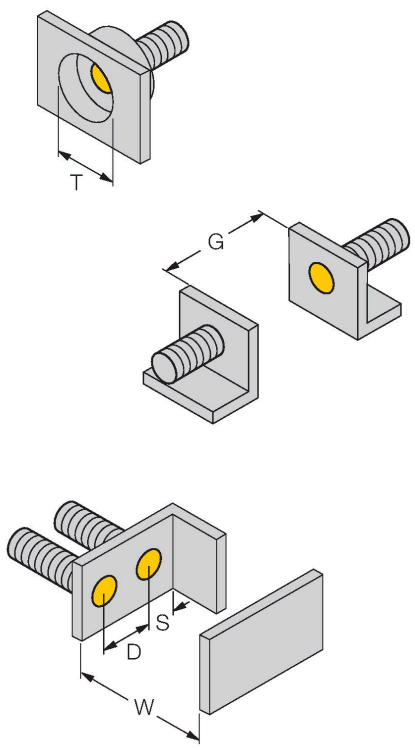


| | |
|---|---|
| Distance D | 2 x B |
| Distance W | 3 x Sn |
| Distance T | 3 x B |
| Distance S | 1.5 x B |
| Distance G | 6 x Sn |
| Diameter active area B | Ø 12 mm |

BI2-EG12SK-Y1X| 09/09/2020 15-32 | technical changes reserved

## Accessories

| BST-12B | 6947212 |
|---|---|

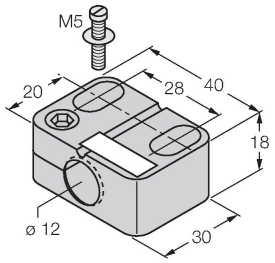


Mounting clamp for threaded barrel sensors, with dead-stop; material: PA6

| QM-12 | 6945101 |
|---|---|

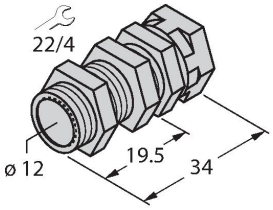


Quick-mount bracket with dead-stop; material: Chrome-plated brass. Male thread M16 × 1. Note: The switching distance of the proximity switches may change when using quick-mount brackets.

| MW-12 | 6945003 |
|---|---|

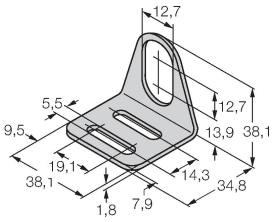


Mounting bracket for threaded barrel sensors; material: Stainless steel A2 1.4301 (AISI 304)

| BSS-12 | 6901321 |
|---|---|

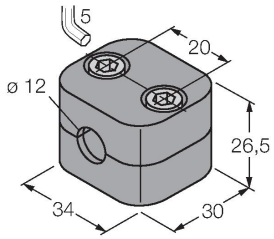


Mounting clamp for smooth and threaded barrel sensors; material: Polypropylene

| IMX12-DI01-2S-2T-0/24VDC | 7580020 |
|---|---|

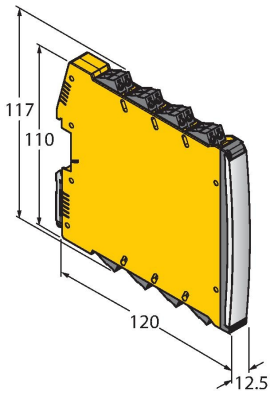


Isolating switching amplifier, 2-channel; SIL2 acc. to IEC 61508; Ex-proof version; 2 transistor outputs; input Namur signal; ON/OFF switchable monitoring of wire-break and short-circuit; toggle between NO/NC mode; signal doubling; removable screw terminals; 12.5 mm wide; 24 VDC power supply

## Operating Instructions

**Intended use**

**This device fulfills the directive 2014/34/EC and is suited for use in explosion hazardous areas according to EN 60079-0:2012 + A11 and EN 60079-11:2012.Further it is suited for use in safety-related systems, including SIL2 as per IEC 61508.In order to ensure correct operation to the intended purpose it is required to observe the national regulations and directives.**

**For use in explosion hazardous areas conform to classification**

II 1 G and II 1 D (Group II, Category 1 G, electrical equipment for gaseous atmospheres and category 1 D, electrical equipment for dust atmospheres).

**Marking (see device or technical data sheet)**

Ex II 1 G and Ex ia IIC T6 Ga acc. to EN60079-0 and -26 and Ex II 1 D Ex ia IIIC T115°C Da acc. to EN60079-0

**Local admissible ambient temperature**

-25…+70 °C

**Installation/Commissioning**

**These devices may only be installed, connected and operated by trained and qualified staff. Qualified staff must have knowledge of protection classes, directives and regulations concerning electrical equipment designed for use in explosion hazardous areas.Please verify that the classification and the marking on the device comply with the actual application conditions.**

**This device is only suited for connection to approved Exi circuits according to EN 60079-0 and EN 60079-11. Please observe the maximum admissible electrical values.After connection to other circuits the sensor may no longer be used in Exi installations. When interconnected to (associated) electrical equipment, it is required to perform the "Proof of intrinsic safety" (EN60079-14).Attention! When used in safety systems, all content of the security manual must be observed.**

**Installation and mounting instructions**

**Avoid static charging of cables and plastic devices. Please only clean the device with a damp cloth. Do not install the device in a dust flow and avoid build-up of dust deposits on the device.If the devices and the cable could be subject to mechanical damage, they must be protected accordingly. They must also be shielded against strong electro-magnetic fields.The pin configuration and the electrical specifications can be taken from the device marking or the technical data sheet.In order to avoid contamination of the device, please remove possible blanking plugs of the cable glands or connectors only shortly before inserting the cable or opening the cable socket.**

**Service/Maintenance**

**Repairs are not possible. The approval expires if the device is repaired or modified by a person other than the manufacturer. The most important data from the approval are listed.**

BI2-EG12SK-Y1X| 09/09/2020 15-32 | technical changes reserved