NI15-EM30WDTC-Y1X
Inductive Sensor – With Increased Temperature Range

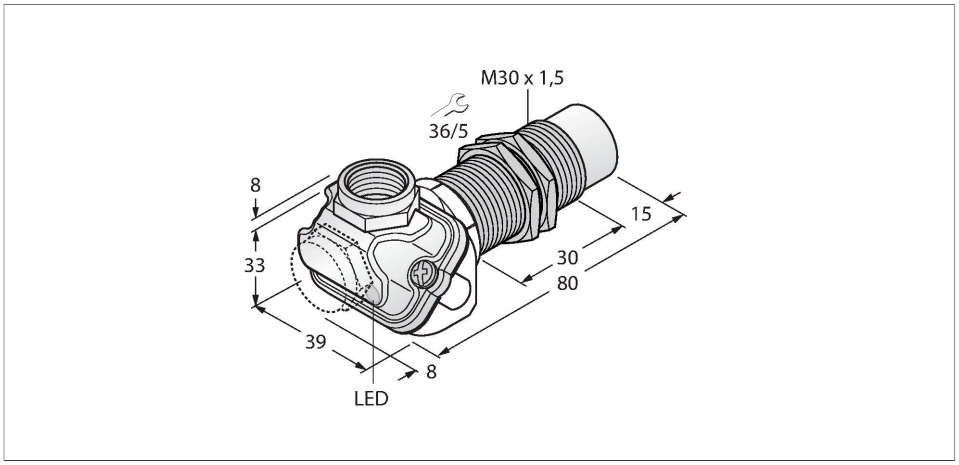

Technical data

Type	NI15-EM30WDTC-Y1X
Ident. no.	4012161
Rated switching distance	15 mm
Mounting conditions	Non-flush
Secured operating distance	≤ (0.81 × Sn) mm
Correction factors	St37 = 1; Al = 0.3; stainless steel = 0.7; Ms = 0.4
Repeat accuracy	≤ 2 % of full scale
Temperature drift	≤ ± 10 %
	≤ ± 20 %, ≤ -25 °C , ≥ +70 °C
Hysteresis	1…10 %
Ambient temperature	-40…+100 °C
	For explosion hazardous areas see instruction leaflet
Output function	2-wire, NAMUR
Switching frequency	0.2 kHz
Voltage	Nom. 8.2 VDC
Non-actuated current consumption	≥ 2.1 mA
Actuated current consumption	≤ 1.2 mA
Approval acc. to	KEMA 02 ATEX 1090X
Internal capacitance (C_i)/inductance (L_i)	150 nF/150 µH
Device marking	Ⓔx II 1 G Ex ia IIC T6 Ga/II 1 D Ex ia IIIC T115 °C Da
	(max. U_i = 20 V, I_i = 20 mA, P_i = 200 mW)
Warning	Avoid static charging

Features

- Threaded barrel, M30 x 1.5
- Stainless steel, 1.4404
- For temperatures of -40 °C…+100 °C
- High protection class IP69K for harsh environments
- Special double-lip seal
- Protection against all common acidic and alkaline cleaning agents
- Suitable for applications in the food industry
- DC 2-wire, nom. 8.2 VDC
- Output acc. to DIN EN 60947-5-6 (NAMUR)
- Terminal chamber
- ATEX category II 1 G, Ex-zone 0 for temperatures up to +80 °C
- ATEX category II 2 G. Ex-zone 1
- ATEX category II 1 D, Ex-zone 20 for temperatures from -25 °C up to +70 °C
- SIL2 (Low Demand Mode) acc. to IEC 61508, PL c acc. to ISO 13849-1 at HFT0
- SIL3 (All Demand Mode) acc. to IEC 61508, PL e acc. to ISO 13849-1 with redundant configuration HTF1

Wiring diagram

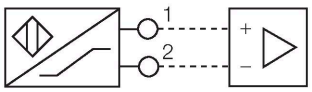

Functional principle

Inductive sensors detect metal objects contactless and wear-free. For this purpose they use a high-frequency electromagnetic AC field that interacts with the target. The sensors hosting a ferrite core coil generate the AC field through an LC resonant circuit.
Special versions are available for ambient temperatures between -60°C and +250°C.

NI15-EM30WDTC-Y1X| 09/09/2020 15-33 | technical changes reserved

Technical data

Design	Threaded barrel, M30 × 1.5
Dimensions	80 mm
Housing material	Stainless steel, 1.4404 (AISI 316L)
Terminal chamber cover material	plastic, Ultem
Terminal chamber housing material	plastic, LCP-GF30
Active area material	Plastic, LCP
Admissible pressure on front cap	≤ 10 bar
Max. tightening torque housing nut	75 Nm
Electrical connection	Terminal chamber, Removable cage clamp terminals
	suited for M16 x 1.5 cable glands
Clamping ability	≤ 1.5 mm²
Vibration resistance	55 Hz (1 mm)
Shock resistance	30 g (11 ms)
Protection class	IP68 / IP69K
MTTF	6198 years acc. to SN 29500 (Ed. 99) 40 °C
Switching state	LED, Yellow

Mounting instructions

Mounting instructions/Description

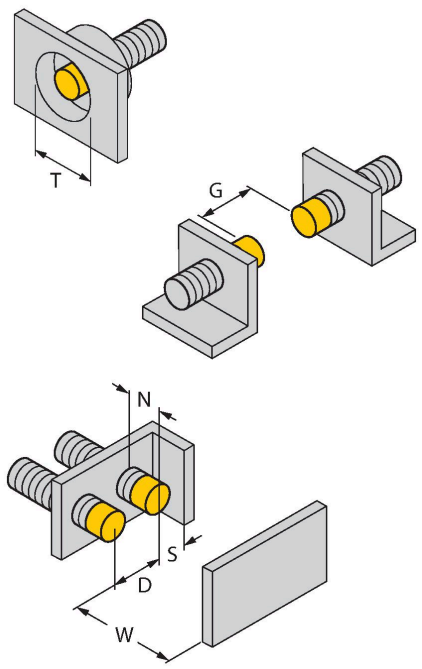

Distance D	3 x B
Distance W	3 x Sn
Distance T	3 x B
Distance S	1.5 x B
Distance G	6 x Sn
Distance N	2 x Sn
Diameter active area B	Ø 30 mm

NI15-EM30WDTC-Y1X| 09/09/2020 15-33 | technical changes reserved

Accessories

MW-30	6945005

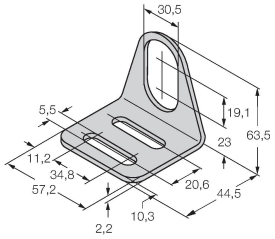

Mounting bracket for threaded barrel sensors; material: Stainless steel A2 1.4301 (AISI 304)

BSS-30	6901319

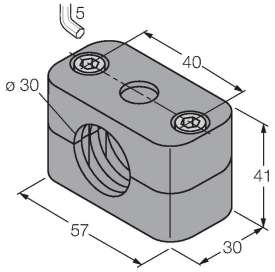

Mounting clamp for smooth and threaded barrel sensors; material: Polypropylene

IMX12-DI01-2S-2T-0/24VDC	7580020

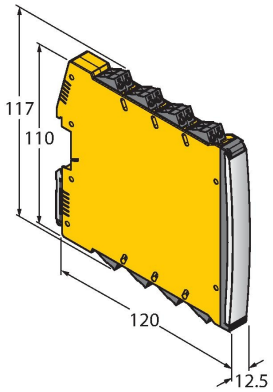

Isolating switching amplifier, 2-channel; SIL2 acc. to IEC 61508; Ex-proof version; 2 transistor outputs; input Namur signal; ON/OFF switchable monitoring of wire-break and short-circuit; toggle between NO/NC mode; signal doubling; removable screw terminals; 12.5 mm wide; 24 VDC power supply

NI15-EM30WDTC-Y1X| 09/09/2020 15-33 | technical changes reserved

Operating Instructions

Intended use

This device fulfills the directive 2014/34/EC and is suited for use in explosion hazardous areas according to EN 60079-0:2012 + A11 and EN 60079-11:2012.Further it is suited for use in safety-related systems, including SIL2 as per IEC 61508.In order to ensure correct operation to the intended purpose it is required to observe the national regulations and directives.

For use in explosion hazardous areas conform to classification

II 1 G and II 1 D (Group II, Category 1 G, electrical equipment for gaseous atmospheres and category 1 D, electrical equipment for dust atmospheres).

Marking (see device or technical data sheet)

Ⓔx II 1 G and Ex ia IIC T6 Ga acc. to EN60079-0 and -26 and Ⓔx II 1 D Ex ia IIIC T115°C Da acc. to EN60079-0

Local admissible ambient temperature

ATEX category II 2 G electrical equipment -40…+100 °C, category II 1 G -40…+80 °C and category II 1 D -25…+70 °C. The corresponding temperature classes are provided in the ATEX type-examination certificate. The device incorporates the custom-built /S97 and /S100 types.

Installation/Commissioning

These devices may only be installed, connected and operated by trained and qualified staff. Qualified staff must have knowledge of protection classes, directives and regulations concerning electrical equipment designed for use in explosion hazardous areas.Please verify that the classification and the marking on the device comply with the actual application conditions.

This device is only suited for connection to approved Exi circuits according to EN 60079-0 and EN 60079-11. Please observe the maximum admissible electrical values.After connection to other circuits the sensor may no longer be used in Exi installations. When interconnected to (associated) electrical equipment, it is required to perform the "Proof of intrinsic safety" (EN60079-14).Attention! When used in safety systems, all content of the security manual must be observed.

Installation and mounting instructions

Avoid static charging of cables and plastic devices. Please only clean the device with a damp cloth. Do not install the device in a dust flow and avoid build-up of dust deposits on the device.If the devices and the cable could be subject to mechanical damage, they must be protected accordingly. They must also be shielded against strong electro-magnetic fields.The pin configuration and the electrical specifications can be taken from the device marking or the technical data sheet.In order to avoid contamination of the device, please remove possible blanking plugs of the cable glands or connectors only shortly before inserting the cable or opening the cable socket.

Special conditions for safe operation

avoid static charging

Service/Maintenance

Repairs are not possible. The approval expires if the device is repaired or modified by a person other than the manufacturer. The most important data from the approval are listed.

NI15-EM30WDTC-Y1X| 09/09/2020 15-33 | technical changes reserved