BI5-G18-Y2X 7M
Inductive Sensor

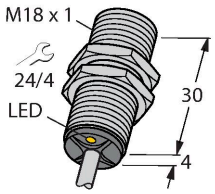

Technical data

Type	BI5-G18-Y2X 7M
Ident. no.	4015501
Rated switching distance	5 mm
Mounting conditions	Flush
Secured operating distance	≤ (0.81 × Sn) mm
Correction factors	St37 = 1; Al = 0.3; stainless steel = 0.7; Ms = 0.4
Repeat accuracy	≤ 2 % of full scale
Temperature drift	≤ ± 10 %
Hysteresis	1…10 %
Ambient temperature	-25…+70 °C
Output function	2-wire, NAMUR
Switching frequency	1 kHz
Voltage	Nom. 8.2 VDC
Non-actuated current consumption	≥ 2.1 mA
Actuated current consumption	≤ 1.2 mA
Approval acc. to	BVS 04 ATEX E 202
Internal capacitance (C_i)/inductance (L_i)	150 nF/150 µH
Device marking	Ex IM1 Ex ia I
	(max. U_i = 15 V, I_i = 60 mA, P_i = 200 mW)
Design	Threaded barrel, M18 × 1
Dimensions	34 mm
Housing material	Metal, CuZn, Chrome-plated
Active area material	Plastic, PA12-GF30

Features

- Threaded barrel, M18 x 1
- Chrome-plated brass
- DC 2-wire, nom. 8.2 VDC
- Output acc. to DIN EN 60947-5-6 (NAMUR)
- Cable connection
- ATEX category I M1, mining

Wiring diagram

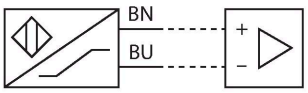

Functional principle

Inductive sensors detect metal objects contactless and wear-free. For this, they use a high-frequency electromagnetic AC field that interacts with the target. Inductive sensors generate this field via an RLC circuit with a ferrite coil.

BI5-G18-Y2X 7M| 09/09/2020 15-34 | technical changes reserved

Technical data

End cap	Plastic, EPTR
Max. tightening torque housing nut	25 Nm
Electrical connection	Cable
Cable quality	Ø 5.2 mm, Blue, LifYY, PVC, 7 m
Core cross-section	2 x 0.34 mm^2
Vibration resistance	55 Hz (1 mm)
Shock resistance	30 g (11 ms)
Protection class	IP67
MTTF	6198 years acc. to SN 29500 (Ed. 99) 40 °C
Switching state	LED, Yellow

Mounting instructions

Mounting instructions/Description

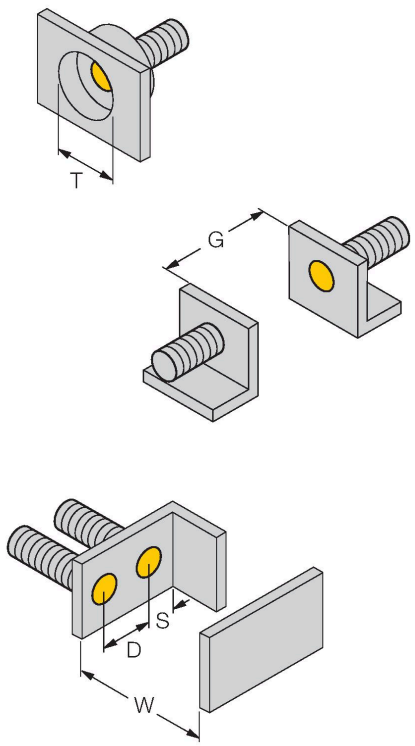

Distance D	2 x B
Distance W	3 x Sn
Distance T	3 x B
Distance S	1.5 x B
Distance G	6 x Sn
Diameter active area B	Ø 18 mm

BI5-G18-Y2X 7M| 09/09/2020 15-34 | technical changes reserved

Accessories

MW-18	6945004
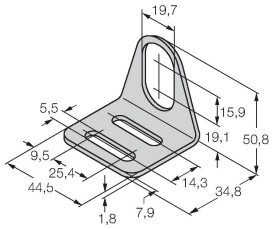	Mounting bracket for threaded barrel sensors; material: Stainless steel A2 1.4301 (AISI 304)

BSS-18	6901320
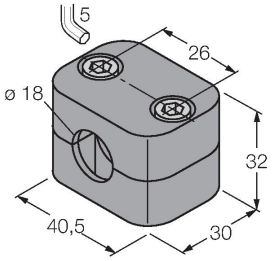	Mounting clamp for smooth and threaded barrel sensors; material: Polypropylene

BI5-G18-Y2X 7M| 09/09/2020 15-34 | technical changes reserved

Operating Instructions

Intended use

This device fulfills the directive 2014/34/EC and is suited for use in explosion hazardous areas according to EN 60079-0 (2012), EN 60079-11 (2012) and EN 50303 (2000).In order to ensure correct operation to the intended purpose it is required to observe the national regulations and directives.

For use in explosion hazardous areas conform to classification

I M 1 (Group I, Category M 1, electrical equipment for mining).

Marking (see device or technical data sheet)

Ex I M 1 and Ex ia I acc. to EN 60079-11

Installation/Commissioning

These devices may only be installed, connected and operated by trained and qualified staff. Qualified staff must have knowledge of protection classes, directives and regulations concerning electrical equipment designed for use in explosion hazardous areas.Please verify that the classification and the marking on the device comply with the actual application conditions.

This device is only suited for connection to approved Exi circuits according to EN 60079-0 and EN 60079-11. Please observe the maximum admissible electrical values.After connection to other circuits the sensor may no longer be used in Exi installations. When interconnected to (associated) electrical equipment, it is required to perform the "Proof of intrinsic safety" (EN60079-14).

Installation and mounting instructions

Avoid static charging of cables and plastic devices. Please only clean the device with a damp cloth. Do not install the device in a dust flow and avoid build-up of dust deposits on the device.If the devices and the cable could be subject to mechanical damage, they must be protected accordingly. They must also be shielded against strong electro-magnetic fields.The pin configuration and the electrical specifications can be taken from the device marking or the technical data sheet.In order to avoid contamination of the device, please remove possible blanking plugs of the cable glands or connectors only shortly before inserting the cable or opening the cable socket.

Service/Maintenance

Repairs are not possible. The approval expires if the device is repaired or modified by a person other than the manufacturer. The most important data from the approval are listed.

BI5-G18-Y2X 7M| 09/09/2020 15-34 | technical changes reserved