NI5-P12SK-Y1X
Inductive sensor

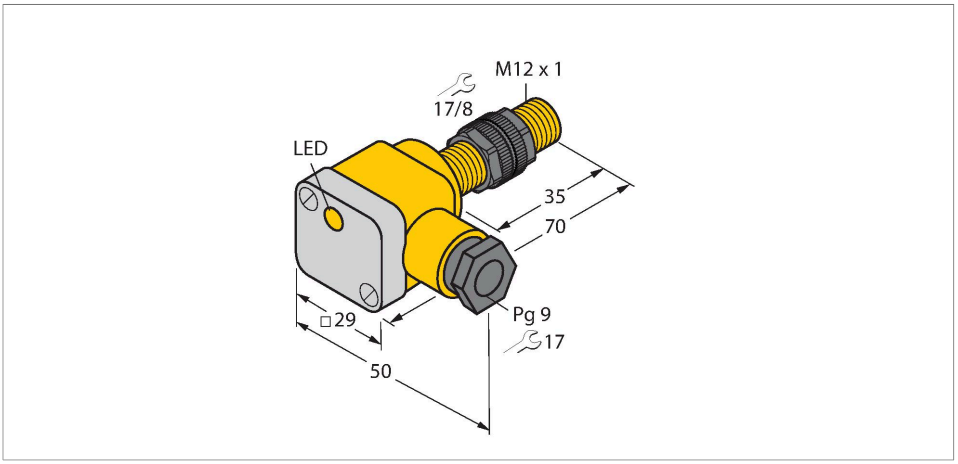

Technical data

Type	NI5-P12SK-Y1X
Ident. no.	40311
Rated switching distance	5 mm
Mounting conditions	Non-flush
Secured operating distance	≤ (0.81 × Sn) mm
Correction factors	St37 = 1; Al = 0.3; stainless steel = 0.7; Ms = 0.4
Repeat accuracy	≤ 2 % of full scale
Temperature drift	≤ ± 10 %
Hysteresis	1…10 %
Ambient temperature	-25…+70 °C
Output function	2-wire, NAMUR
Switching frequency	2 kHz
Voltage	Nom. 8.2 VDC
Non-actuated current consumption	≥ 2.1 mA
Actuated current consumption	≤ 1.2 mA
Approval acc. to	KEMA 02 ATEX 1090X
Internal capacitance (C_i)/inductance (L_i)	150 nF/150 µH
Device marking	Ⓔx II 2 G Ex ia IIC T6 Gb / II 1 D Ex ia IIIC T115 °C Da
	(max. U_i = 20 V, I_i = 20 mA, P_i = 200 mW)
Design	Threaded barrel, M12 × 1
Dimensions	70 mm
Housing material	Plastic, PA12-GF30
Terminal chamber cover material	plastic, Ultem

Features

- Threaded barrel, M12 x 1
- Plastic, PA12-GF30
- DC 2-wire, nom. 8.2 VDC
- Output acc. to DIN EN 60947-5-6 (NAMUR)
- Terminal chamber
- ATEX category II 2 G, Ex zone 1
- ATEX category II 1 D, Ex zone 20
- SIL2 (Low Demand Mode) acc. to IEC 61508, PL c acc. to ISO 13849-1 at HFT0
- SIL3 (All Demand Mode) acc. to IEC 61508, PL e acc. to ISO 13849-1 with redundant configuration HFT1

Wiring diagram

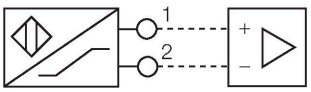

Functional principle

Inductive sensors detect metal objects contactless and wear-free. For this, they use a high-frequency electromagnetic AC field that interacts with the target. Inductive sensors generate this field via an RLC circuit with a ferrite coil.

NI5-P12SK-Y1X| 03/07/2020 08-18 | technical changes reserved

Technical data

Terminal chamber housing material	plastic, plastic, PA12-GF20
Active area material	Plastic, PA12-GF30
Max. tightening torque housing nut	1 Nm
Electrical connection	Terminal chamber
Clamping ability	≤ 2.5 mm²
Cable external diameter	4.5…8 mm
Vibration resistance	55 Hz (1 mm)
Shock resistance	30 g (11 ms)
Protection class	IP67
MTTF	6198 years acc. to SN 29500 (Ed. 99) 40 °C
Switching state	LED, Yellow
Included in delivery	cable gland; 2x plastic seals

Mounting instructions

Mounting instructions/Description

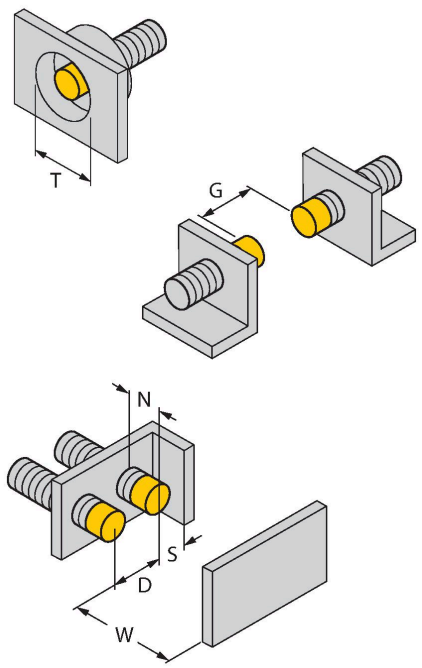

Distance D	3 x B
Distance W	3 x Sn
Distance T	3 x B
Distance S	1.5 x B
Distance G	6 x Sn
Distance N	2 x Sn
Diameter active area B	Ø 12 mm

NI5-P12SK-Y1X| 03/07/2020 08-18 | technical changes reserved

Accessories

IMX12-DI01-2S-2T-0/24VDC **7580020**

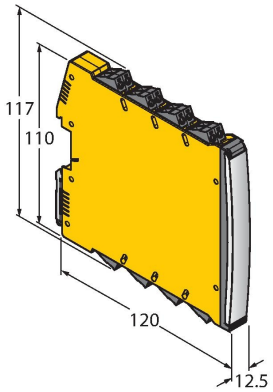

Isolating switching amplifier, 2-channel; SIL2 acc. to IEC 61508; Ex-proof version; 2 transistor outputs; input Namur signal; ON/OFF switchable monitoring of wire-break and short-circuit; toggle between NO/NC mode; signal doubling; removable screw terminals; 12.5 mm wide; 24 VDC power supply

BST-12B **6947212**

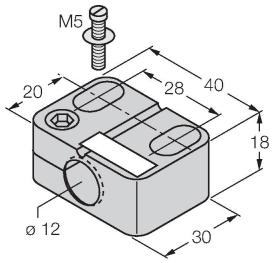

Mounting clamp for threaded barrel sensors, with dead-stop; material: PA6

QM-12 **6945101**

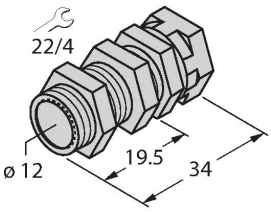

Quick-mount bracket with dead-stop; material: Chrome-plated brass. Male thread M16 × 1. Note: The switching distance of the proximity switches may change when using quick-mount brackets.

MW12 **6945003**

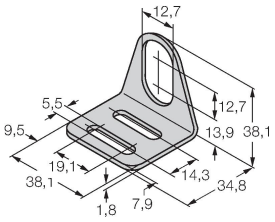

Mounting bracket for threaded barrel sensors; material: Stainless steel A2 1.4301 (AISI 304)

BSS-12 **6901321**

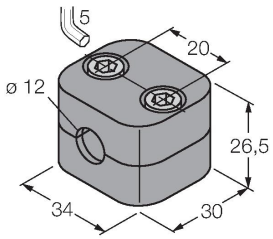

Mounting clamp for smooth and threaded barrel sensors; material: Polypropylene

NI5-P12SK-Y1X| 03/07/2020 08-18 | technical changes reserved

Operating Instructions

Intended use

This device fulfills the directive 2014/34/EC and is suited for use in explosion hazardous areas according to EN 60079-0:2012 + A11 and EN 60079-11:2012.Further it is suited for use in safety-related systems, including SIL2 as per IEC 61508.In order to ensure correct operation to the intended purpose it is required to observe the national regulations and directives.

For use in explosion hazardous areas conform to classification

II 2 G and II 1 D (Group II, Category 2 G, electrical equipment for gaseous atmospheres and category 1 D, electrical equipment for dust atmospheres).

Marking (see device or technical data sheet)

Ⓔx II 2 G and Ex ia IIC T6 Gb acc. to EN60079-0 and -26 und Ⓔx II 1 D Ex ia IIIC T115°C Da acc. to EN60079-0

Local admissible ambient temperature

-25…+70 °C

Installation/Commissioning

These devices may only be installed, connected and operated by trained and qualified staff. Qualified staff must have knowledge of protection classes, directives and regulations concerning electrical equipment designed for use in explosion hazardous areas.Please verify that the classification and the marking on the device comply with the actual application conditions.

This device is only suited for connection to approved Exi circuits according to EN 60079-0 and EN 60079-11. Please observe the maximum admissible electrical values.After connection to other circuits the sensor may no longer be used in Exi installations. When interconnected to (associated) electrical equipment, it is required to perform the "Proof of intrinsic safety" (EN60079-14).Attention! When used in safety systems, all content of the security manual must be observed.

Installation and mounting instructions

Avoid static charging of cables and plastic devices. Please only clean the device with a damp cloth. Do not install the device in a dust flow and avoid build-up of dust deposits on the device.If the devices and the cable could be subject to mechanical damage, they must be protected accordingly. They must also be shielded against strong electro-magnetic fields.The pin configuration and the electrical specifications can be taken from the device marking or the technical data sheet.In order to avoid contamination of the device, please remove possible blanking plugs of the cable glands or connectors only shortly before inserting the cable or opening the cable socket.

Service/Maintenance

Repairs are not possible. The approval expires if the device is repaired or modified by a person other than the manufacturer. The most important data from the approval are listed.