NI20-CP40-AD4X
Inductive sensor

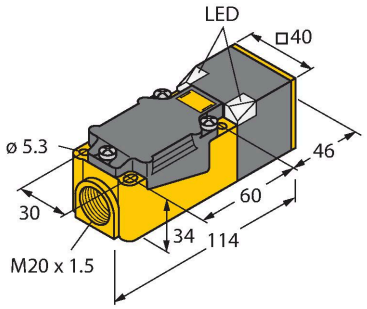

Technical data

Type	NI20-CP40-AD4X
Ident. no.	44661
Rated switching distance	20 mm
Mounting conditions	Non-flush
Secured operating distance	≤ (0.81 × Sn) mm
Correction factors	St37 = 1; Al = 0.3; stainless steel = 0.7; Ms = 0.4
Repeat accuracy	≤ 2 % of full scale
Temperature drift	≤ ± 10 %
Hysteresis	1…15 %
Ambient temperature	-25…+70 °C
Operating voltage	10…65 VDC
Residual ripple	≤ 10 % U_{ss}
DC rated operational current	≤ 100 mA
Residual current	≤ 0.6 mA
Isolation test voltage	≤ 0.5 kV
Short-circuit protection	yes / Cyclic
Voltage drop at I_e	≤ 5 V
Wire breakage/Reverse polarity protection	Complete
Output function	2-wire, NO contact, 2-wire
Smallest operating current	≥ 3 mA
Switching frequency	0.15 kHz
Design	Rectangular, CP40
Dimensions	114 x 40 x 40 mm
Housing material	Plastic, PBT-GF30-V0, Black

Features

- Rectangular, height 40 mm
- Variable orientation of active face in 9 directions
- Plastic, PBT-GF30-VO
- High-luminance corner LEDs
- Optimum view of operating voltage and switching state from any position
- DC 2-wire, 10…65 VDC
- NO contact
- Terminal chamber

Wiring diagram

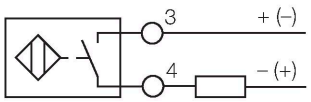

Functional principle

Inductive sensors detect metal objects contactless and wear-free. For this, they use a high-frequency electromagnetic AC field that interacts with the target. Inductive sensors generate this field via an RLC circuit with a ferrite coil.

NI20-CP40-AD4X| 03/07/2020 08-29 | technical changes reserved

Technical data

Active area material	Plastic, PBT-GF30-V0, yellow
Electrical connection	Terminal chamber
Clamping ability	≤ 2.5 mm²
Vibration resistance	55 Hz (1 mm)
Shock resistance	30 g (11 ms)
Protection class	IP67
MTTF	2283 years acc. to SN 29500 (Ed. 99) 40 °C
Switching state	LED, Yellow

Mounting instructions

Mounting instructions/Description

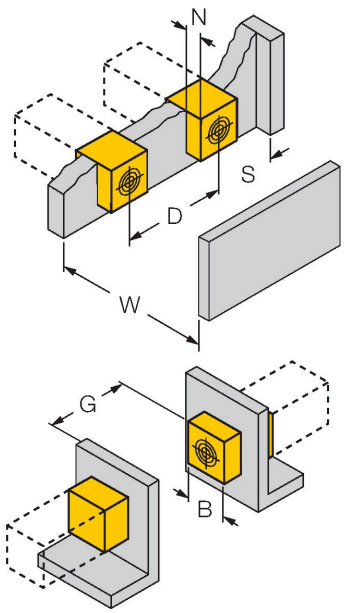

Distance D	3 x B
Distance W	3 x Sn
Distance S	1.5 x B
Distance G	6 x Sn
Distance N	1 x B
Width active area B	40 mm

Accessories

JS025/037 **69429**

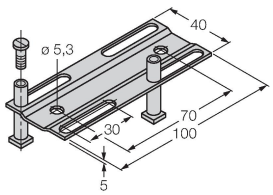

Adjusting bar for rectangular housings CK/CP40; material: VA 1.4301

BSS-CP40 **6901318**

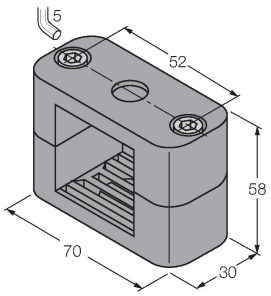

Mounting clamp for rectangular housings 40 x 40 mm; material: Polypropylene

NI20-CP40-AD4X| 03/07/2020 08-29 | technical changes reserved