# BI3-M08-VP6X-V1141
# Inductive Sensor – With Increased Switching Distance

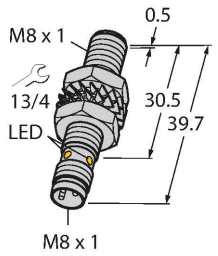


## Technical data

| | |
|---|---|
| Type | BI3-M08-VP6X-V1141 |
| Ident. no. | 4602830 |
| Rated switching distance | 3 mm |
| Mounting conditions | Flush |
| Secured operating distance | ≤ (0.81 × Sn) mm |
| Correction factors | St37 = 1; Al = 0.3; stainless steel = 0.7; Ms = 0.4 |
| Repeat accuracy | ≤ 2 % of full scale |
| Temperature drift | ≤ ± 10 % |
| Hysteresis | 3…15 % |
| Ambient temperature | -25…+70 °C |
| Operating voltage | 10…30 VDC |
| Residual ripple | ≤ 10 % $U_{ss}$ |
| DC rated operational current | ≤ 150 mA |
| No-load current | ≤ 15 mA |
| Residual current | ≤ 0.1 mA |
| Isolation test voltage | ≤ 0.5 kV |
| Short-circuit protection | yes / Cyclic |
| Voltage drop at $I_e$ | ≤ 1.8 V |
| Wire breakage/Reverse polarity protection | yes / Complete |
| Output function | 4-wire, Complementary contact, PNP |
| Switching frequency | 2.8 kHz |
| Design | Threaded barrel, M8 × 1 |
| Dimensions | 39.7 mm |

## Features

- Threaded barrel, M8 x 1
- Nickel-plated brass
- Large sensing range
- DC 4-wire, 10…30 VDC
- Changeover contact, PNP output
- M8 x 1 male connector

## Wiring diagram

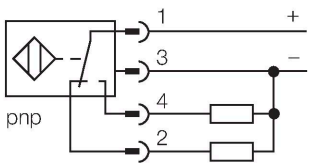





## Functional principle

Inductive sensors detect metal objects contactless and wear-free. For this, they use a high-frequency electromagnetic AC field that interacts with the target. Inductive sensors generate this field via an RLC circuit with a ferrite coil.

BI3-M08-VP6X-V1141| 09/09/2020 16-13 | technical changes reserved

## Technical data

| | |
|---|---|
| Housing material | Metal, CuZn, Nickel-plated |
| Active area material | Plastic, PP-GF20 |
| Max. tightening torque housing nut | 7 Nm |
| Electrical connection | Connector, M8 × 1 |
| Vibration resistance | 55 Hz (1 mm) |
| Shock resistance | 30 g (11 ms) |
| Protection class | IP67 |
| MTTF | 2283 years acc. to SN 29500 (Ed. 99) 40 °C |
| Switching state | LED, Yellow |

## Mounting instructions

Mounting instructions/Description

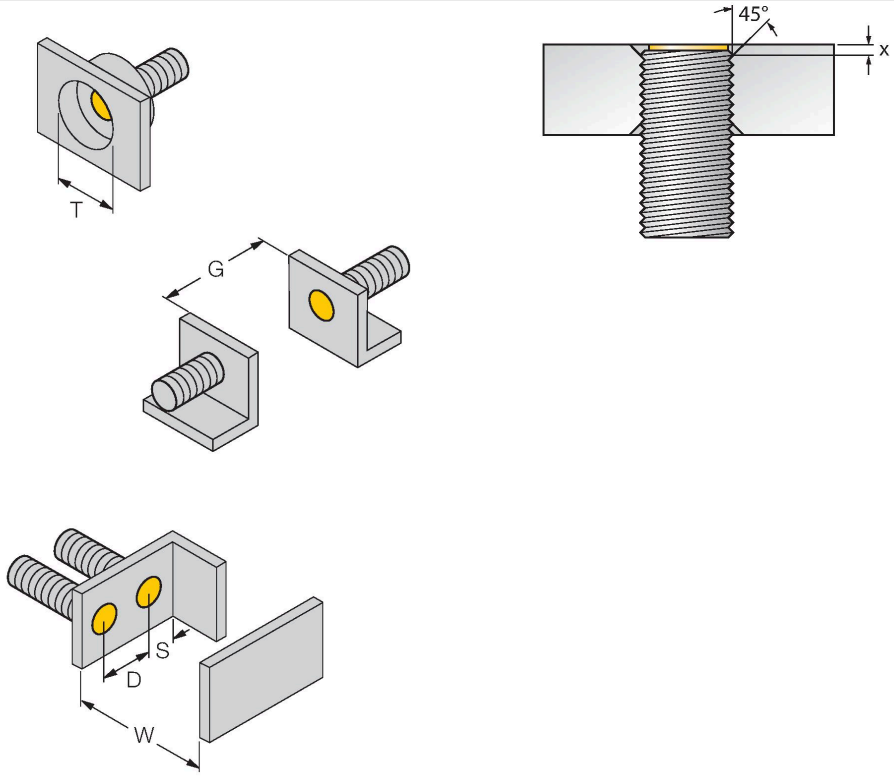


| | |
|---|---|
| Distance D | 2 x B |
| Distance W | 3 x Sn |
| Distance T | 3 x B |
| Distance S | 1.5 x B |
| Distance G | 6 x Sn |
| Diameter active area B | Ø 8 mm |

Flush installation in brass, aluminium and stainless steel with the supplied nuts is possible without restrictions.
If installed flush in steel, a phase of 45° and min. depth of 1.7 mm (dimension X) must be observed.

BI3-M08-VP6X-V1141| 09/09/2020 16-13 | technical changes reserved

## Accessories

| MW-08 | 6945008 |
|---|---|
| 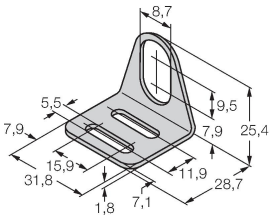 | Mounting bracket for threaded barrel sensors; material: Stainless steel A2 1.4301 (AISI 304) |

| BSS-08 | 6901322 |
|---|---|
| 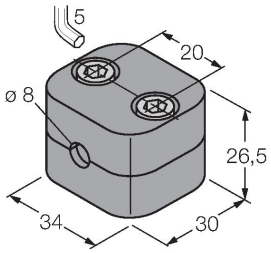 | Mounting clamp for smooth and threaded barrel sensors; material: Polypropylene |

| MBS80 | 69479 |
|---|---|
| 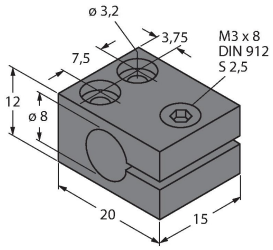 | Mounting clamp for smooth barrel sensors; mounting block material: Anodized aluminum |

BI3-M08-VP6X-V1141| 09/09/2020 16-13 | technical changes reserved