NI3-M08E-VN6X 7M
Inductive Sensor – With Increased Switching Distance

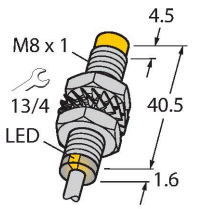

Technical data

Type	NI3-M08E-VN6X 7M
Ident. no.	4602837
Rated switching distance	3 mm
Mounting conditions	Non-flush
Secured operating distance	≤ (0.81 × Sn) mm
Correction factors	St37 = 1; Al = 0.3; stainless steel = 0.7; Ms = 0.4
Repeat accuracy	≤ 2 % of full scale
Temperature drift	≤ ± 10 %
Hysteresis	3…15 %
Ambient temperature	-25…+70 °C
Operating voltage	10…30 VDC
Residual ripple	≤ 10 % U_{ss}
DC rated operational current	≤ 150 mA
No-load current	≤ 15 mA
Residual current	≤ 0.1 mA
Isolation test voltage	≤ 0.5 kV
Short-circuit protection	yes / Cyclic
Voltage drop at I_e	≤ 1.8 V
Wire breakage/Reverse polarity protection	yes / Complete
Output function	4-wire, Complementary contact, NPN
Switching frequency	2.8 kHz
Design	Threaded barrel, M8 × 1
Dimensions	42.1 mm

Features

- Threaded barrel, M8 x 1
- Nickel-plated brass
- Large sensing range
- DC 4-wire, 10…30 VDC
- Complementary, NPN output
- Cable connection

Wiring diagram

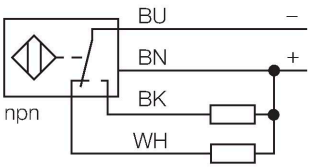

Functional principle

Inductive sensors detect metal objects contactless and wear-free. For this, they use a high-frequency electromagnetic AC field that interacts with the target. Inductive sensors generate this field via an RLC circuit with a ferrite coil.

NI3-M08E-VN6X 7M| 09/09/2020 16-17 | technical changes reserved

Technical data

Housing material	Metal, CuZn, Nickel-plated
Active area material	Plastic, PP-GF20
End cap	Plastic, PP-GF20
Max. tightening torque housing nut	7 Nm
Electrical connection	Cable
Cable quality	Ø 3 mm, Gray, Lif9Y-11Y, PUR, 7 m
Core cross-section	4 x 0.14 mm^2
Vibration resistance	55 Hz (1 mm)
Shock resistance	30 g (11 ms)
Protection class	IP67
MTTF	2283 years acc. to SN 29500 (Ed. 99) 40 °C
Switching state	LED, Yellow

Mounting instructions

Mounting instructions/Description

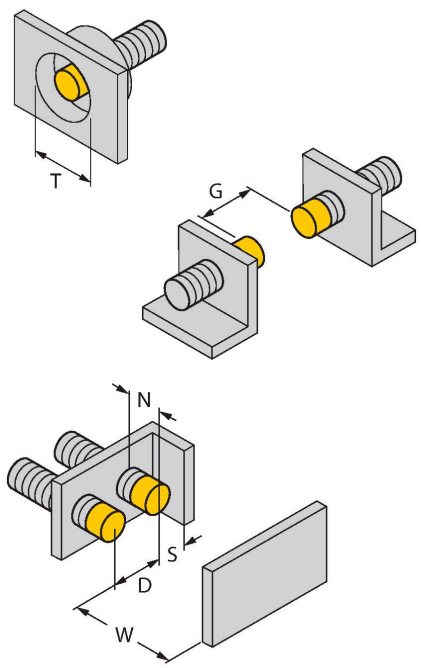

Distance D	3 x B
Distance W	3 x Sn
Distance T	3 x B
Distance S	1.5 x B
Distance G	6 x Sn
Distance N	2 x Sn
Diameter active area B	Ø 8 mm

NI3-M08E-VN6X 7M| 09/09/2020 16-17 | technical changes reserved

Accessories

MW-08	6945008
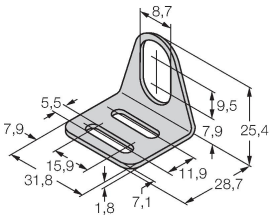	Mounting bracket for threaded barrel sensors; material: Stainless steel A2 1.4301 (AISI 304)

BSS-08	6901322
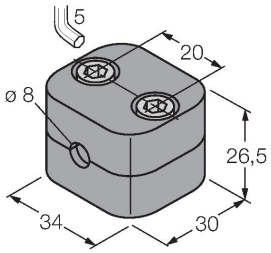	Mounting clamp for smooth and threaded barrel sensors; material: Polypropylene

MBS80	69479
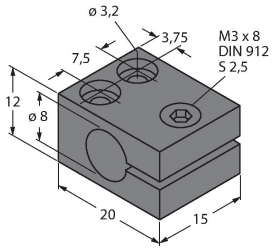	Mounting clamp for smooth barrel sensors; mounting block material: Anodized aluminum

NI3-M08E-VN6X 7M| 09/09/2020 16-17 | technical changes reserved