BI3-M08K-AP6X
Inductive Sensor – With Increased Switching Distance

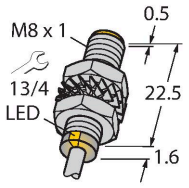

Features

- Threaded barrel, M8 x 1
- Nickel-plated brass
- Large sensing range
- DC 3-wire, 10…30 VDC
- NO contact, PNP output
- Cable connection

Wiring diagram

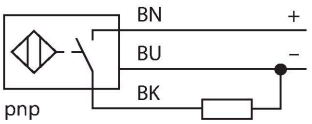

Functional principle

Inductive sensors detect metal objects contactless and wear-free. For this, they use a high-frequency electromagnetic AC field that interacts with the target. Inductive sensors generate this field via an RLC circuit with a ferrite coil.

Technical data

Type	BI3-M08K-AP6X
Ident. no.	4602919
Rated switching distance	3 mm
Mounting conditions	Flush
Secured operating distance	≤ (0.81 × Sn) mm
Correction factors	St37 = 1; Al = 0.3; stainless steel = 0.7; Ms = 0.4
Repeat accuracy	≤ 2 % of full scale
Temperature drift	≤ ± 10 %
Hysteresis	3…15 %
Ambient temperature	-25…+70 °C
Operating voltage	10…30 VDC
Residual ripple	≤ 10 % U_{ss}
DC rated operational current	≤ 150 mA
No-load current	≤ 15 mA
Residual current	≤ 0.1 mA
Isolation test voltage	≤ 0.5 kV
Short-circuit protection	yes / Cyclic
Voltage drop at I_e	≤ 1.8 V
Wire breakage/Reverse polarity protection	yes / Complete
Output function	3-wire, NO contact, PNP
Switching frequency	2.8 kHz
Design	Threaded barrel, M8 × 1
Dimensions	24.1 mm

BI3-M08K-AP6X| 09/09/2020 16-14 | technical changes reserved

Technical data

Housing material	Metal, CuZn, Nickel-plated
Active area material	Plastic, PP-GF20
End cap	Plastic, PP-GF20
Max. tightening torque housing nut	7 Nm
Electrical connection	Cable
Cable quality	Ø 3 mm, Gray, Lif9Y-11Y, PUR, 2 m
	Suited for E-ChainSystems® acc. to manufacturers declaration H1063M
Core cross-section	3 x 0.14 mm²
Vibration resistance	55 Hz (1 mm)
Shock resistance	30 g (11 ms)
Protection class	IP67
MTTF	2283 years acc. to SN 29500 (Ed. 99) 40 °C
Switching state	LED, Yellow

Mounting instructions

Mounting instructions/Description

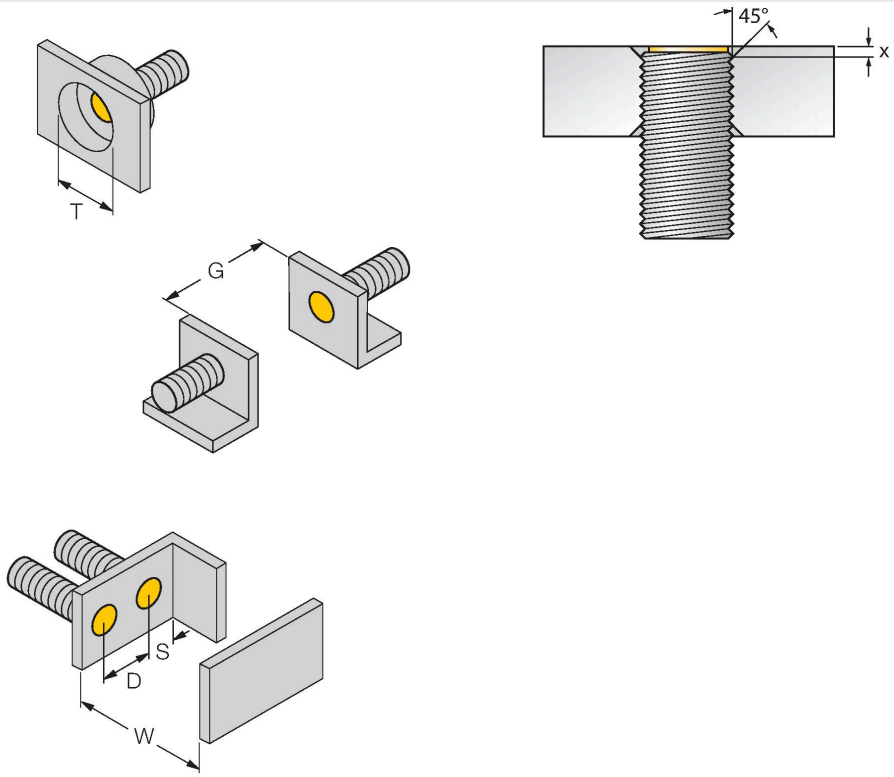

Distance D	2 x B
Distance W	3 x Sn
Distance T	3 x B
Distance S	1.5 x B
Distance G	6 x Sn
Diameter active area B	Ø 8 mm

Flush installation in brass, aluminium and stainless steel with the supplied nuts is possible without restrictions.
If installed flush in steel, a phase of 45° and min. depth of 1.7 mm (dimension X) must be observed.

BI3-M08K-AP6X| 09/09/2020 16-14 | technical changes reserved

Accessories

MW-08	6945008

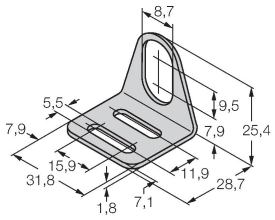

Mounting bracket for threaded barrel sensors; material: Stainless steel A2 1.4301 (AISI 304)

BSS-08	6901322

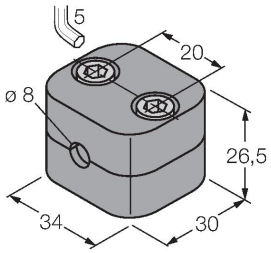

Mounting clamp for smooth and threaded barrel sensors; material: Polypropylene

MBS80	69479

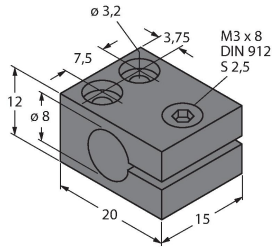

Mounting clamp for smooth barrel sensors; mounting block material: Anodized aluminum