NI8-EM18-AP6/S907
Inductive Sensor – With Increased Temperature Range

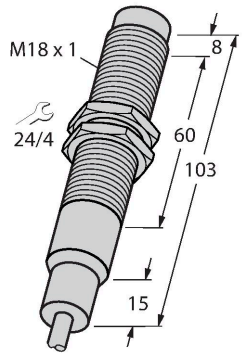

Features

- Threaded barrel, M18 x 1
- Stainless steel, 1.4571
- Temperatures up to +160 °C
- DC 3-wire, 10…30 VDC
- NO contact, PNP output
- Cable connection

Wiring diagram

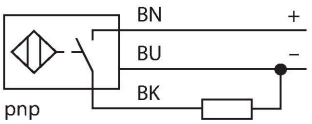

Technical data

Type	NI8-EM18-AP6/S907
Ident. no.	4611231
Special version	S907 corresponds to: Maximum ambient temperature = 160 °C
Rated switching distance	8 mm
Mounting conditions	Non-flush
Secured operating distance	≤ (0.81 × Sn) mm
Correction factors	St37 = 1; Al = 0.3; stainless steel = 0.7; Ms = 0.4
Repeat accuracy	≤ 2 % of full scale
Temperature drift	≤ ± 20 %
Hysteresis	3…15 %
Ambient temperature	-25…+160 °C
Operating voltage	10…30 VDC
Residual ripple	≤ 10 % U_{ss}
DC rated operational current	≤ 200 mA
Rated operational current	See derating curve
No-load current	≤ 15 mA
Residual current	≤ 0.1 mA
Isolation test voltage	≤ 0.5 kV
Short-circuit protection	yes / Cyclic
Voltage drop at I_e	≤ 1.8 V
Wire breakage/Reverse polarity protection	yes / Complete
Output function	3-wire, NO contact, PNP
Switching frequency	0.2 kHz

Functional principle

Inductive sensors detect metal objects contactless and wear-free. For this purpose they use a high-frequency electromagnetic AC field that interacts with the target. The sensors hosting a ferrite core coil generate the AC field through an LC resonant circuit.
Special versions are available for ambient temperatures between -60°C and +250°C.

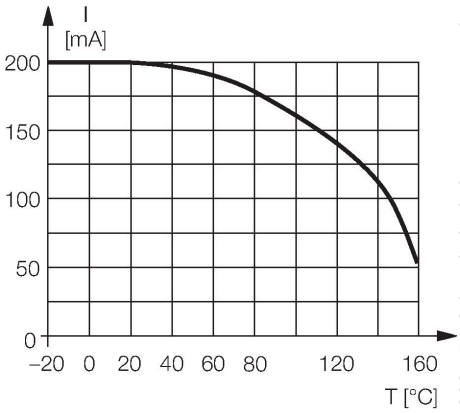

NI8-EM18-AP6/S907| 09/09/2020 15-52 | technical changes reserved

Technical data

Design	Threaded barrel, M18 × 1
Dimensions	103 mm
Housing material	Stainless steel, 1.4571 (AISI 316Ti)
Active area material	Plastic, PEEK
End cap	Plastic, PTFE
Max. tightening torque housing nut	25 Nm
Electrical connection	Cable
Cable quality	Ø 3.7 mm, PTFE, FEP, 2 m
Core cross-section	3 x 0.34 mm^2
Vibration resistance	55 Hz (1 mm)
Shock resistance	30 g (11 ms)
Protection class	IP68 / IP69K

Mounting instructions

Mounting instructions/Description

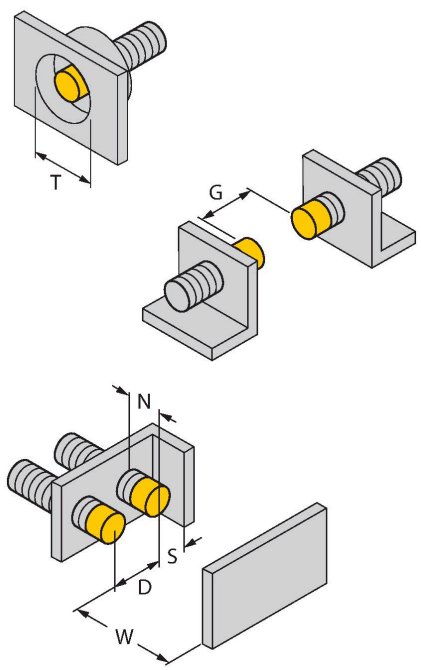

Distance D	3 x B
Distance W	3 x Sn
Distance T	3 x B
Distance S	1.5 x B
Distance G	6 x Sn
Distance N	2 x Sn
Diameter active area B	Ø 18 mm

NI8-EM18-AP6/S907| 09/09/2020 15-52 | technical changes reserved

Accessories

MW-18	6945004
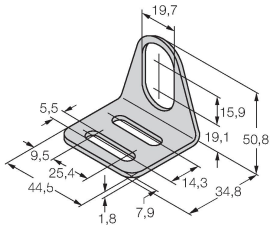	Mounting bracket for threaded barrel sensors; material: Stainless steel A2 1.4301 (AISI 304)

NI8-EM18-AP6/S907| 09/09/2020 15-52 | technical changes reserved