BI5-EM18D-VP6X/S120 10M
Inductive Sensor – For Harsh Environments and Temperatures up to 120°C

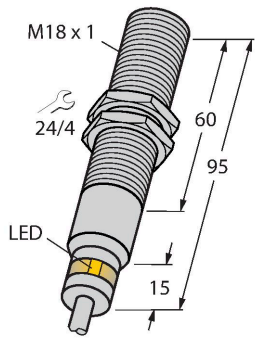

Features

- Threaded barrel, M18 x 1
- Stainless steel, 1.4571
- Viton sealing ring
- Protection class IP68/IP69K
- For temperatures up to +120 °C
- PTFE front cap
- Climate-proof
- Resistance to cooling lubricants, cutting and grinding oils
- Suitable for applications in the food industry
- DC 4-wire, 10…30 VDC
- Changeover contact, PNP output
- Cable connection

Technical data

Type	BI5-EM18D-VP6X/S120 10M
ID	4614901
Special version	S120 Corresponds to:Maximum ambient temperature = 120 °C
General data	
Rated switching distance	5 mm
Mounting conditions	Flush
Secured operating distance	≤ (0.81 × Sn) mm
Correction factors	St37 = 1; Al = 0.3; stainless steel = 0.7; Ms = 0.4
Repeat accuracy	≤ 2 % of full scale
Temperature drift	≤ ±10 %
	≤ ± 20 %, ≥ +70 °C
Hysteresis	3…15 %
Electrical data	
Operating voltage U_B	10…30 VDC
Ripple U_{ss}	≤ 10 % U_{Bmax}
DC rated operating current I_e	≤ 200 mA
Rated operational current	See derating curve
No-load current	≤ 15 mA
Residual current	≤ 0.1 mA
Isolation test voltage	0.5 kV
Short-circuit protection	yes/Cyclic

Wiring diagram

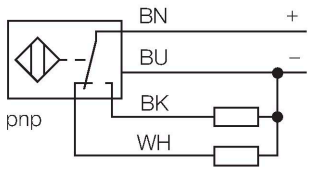

Functional principle

TURCK offers leak-proof sensors for the food industry and machine engineering that are resistant to cleaning agents, cooling lubricants, cutting and grinding oils. They are made for rough environmental conditions and not only meet but even exceed the requirements of the protection classes IP68 and IP69.
Special versions are available for ambient temperatures between -60°C and +250°C.

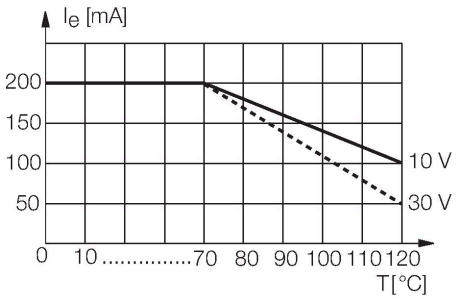

BI5-EM18D-VP6X/S120 10M| 02/21/2025 14-29 | technical changes reserved

Technical data

Voltage drop at I_e	≤ 1.8 V
Wire break/reverse polarity protection	yes/Complete
Output function	4-wire, Complementary contact, PNP
Switching frequency	0.1 kHz
Mechanical data	
Design	Threaded barrel, M18 x 1
Dimensions	95 mm
Housing material	Stainless steel, 1.4571 (AISI 316Ti)
Active area material	Plastic, PTFE
End cap	Plastic, PTFE
Admissible pressure on front cap	≤ 10 bar
Max. tightening torque of housing nut	25 Nm
Electrical connection	Cable
Cable quality	Ø 3.7 mm, PTFE, FEP, 10 m
Core cross-section	4 x 0.25 mm^2
Environmental conditions	
Ambient temperature	-25…+120 °C
Vibration resistance	55 Hz (1 mm)
Shock resistance	30 g (11 ms)
Protection class	IP68 IP69K
Switching state	LED, Yellow

BI5-EM18D-VP6X/S120 10M| 02/21/2025 14-29 | technical changes reserved

Mounting instructions

Mounting instructions/Description

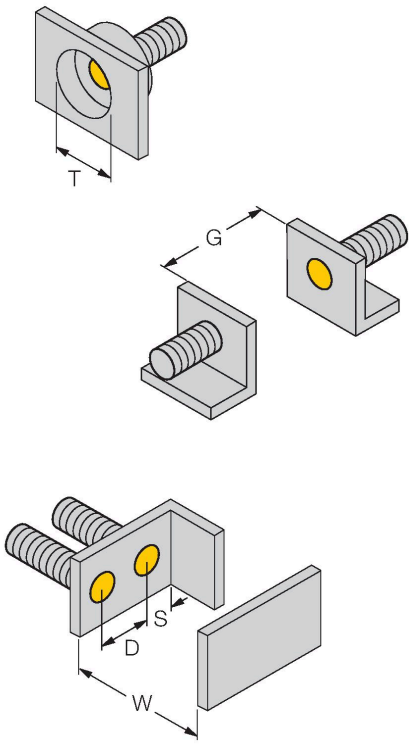

Distance D	2 x B
Distance W	3 x Sn
Distance T	3 x B
Distance S	1.5 x B
Distance G	6 x Sn
Diameter active area B	Ø 18 mm

Accessories

MW18	6945004
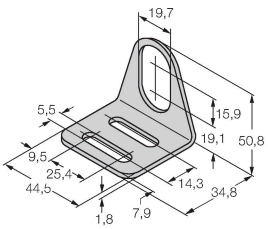	Mounting bracket for threaded barrel sensors; material: Stainless steel A2 1.4301 (AISI 304)

QM-18	6945102
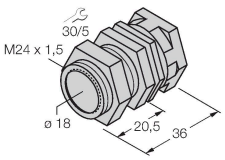	Quick-mount bracket with dead-stop; material: Chrome-plated brass. Male thread M24 × 1.5. Note: The switching distance of the proximity switches may change when using quick-mount brackets.