BIM-PST-AN6X-V1131
Magnetic Field Sensor – For Pneumatic Cylinders

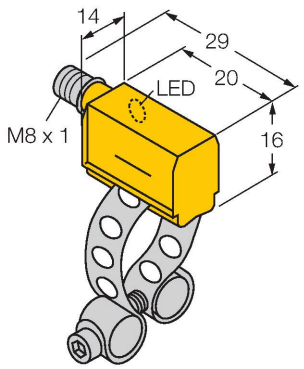

Technical data

Type	BIM-PST-AN6X-V1131
Ident. no.	46251
Pass speed	≤ 10 m/s
Repeatability	≤ ± 0.1 mm
Temperature drift	≤ 0.1 mm
Hysteresis	≤ 1 mm
Ambient temperature	-25…+70 °C
Operating voltage	10…30 VDC
Residual ripple	≤ 10 % U_{ss}
DC rated operational current	≤ 200 mA
No-load current	≤ 15 mA
Residual current	≤ 0.1 mA
Isolation test voltage	≤ 0.5 kV
Short-circuit protection	yes / Cyclic
Voltage drop at I_e	≤ 1.8 V
Wire breakage/Reverse polarity protection	yes / Complete
Output function	3-wire, NO contact, NPN
Switching frequency	1 kHz
Design	Rectangular, PST
Dimensions	23 x 14 x 16 mm
Housing material	Plastic, PA12-GF30
Active area material	Plastic, PA12-GF30
Electrical connection	Connector, M8 × 1
Vibration resistance	55 Hz (1 mm)

Features

- Rectangular, height 16 mm
- Active face in front
- Plastic, PA12-GF30
- Magnetic-inductive sensor
- DC 3-wire, 10…30 VDC
- NO contact, NPN output
- Male M8 x 1

Wiring diagram

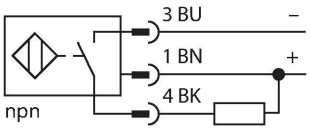

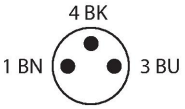

Functional principle

Magnetic field sensors are activated by magnetic fields and are especially suited for piston position detection in pneumatic cylinders. Based on the fact that magnetic fields can permeate non-magnetizable metals, it is possible to detect a permanent magnet attached to the piston through the aluminium wall of the cylinder.

BIM-PST-AN6X-V1131| 09/09/2020 16-32 | technical changes reserved

Technical data

Shock resistance	30 g (11 ms)
Protection class	IP67
MTTF	2283 years acc. to SN 29500 (Ed. 99) 40 °C
Mounting on the following profiles	
Cylindrical design	◯
Switching state	LED, Yellow
Included in delivery	KLP25

Accessories

KLP 25 MONTAGESET 69653

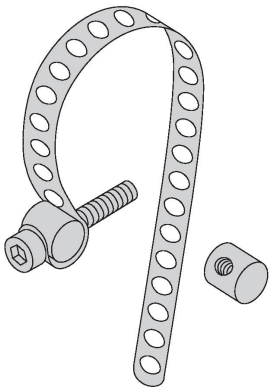

Mounting on round cylinders; cylinder diameter 8…25 mm; material: Metal CuZn; two tie bolts (material: Metal CuZn), cylinder screw M3 x 20

KLP 80-VA 69654

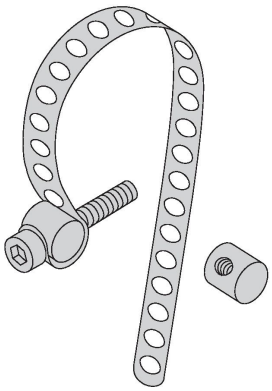

Mounting on round cylinders; cylinder diameter 25…80 mm; material: Metal A2 1.4301 (AISI 304); two tie bolts (material: Metal CuZn, alternatively metal A2 1.4301 / AISI 304) cylinder screw M3 x 20; (DIN 912-A20)

KLP 200-VA 6965302

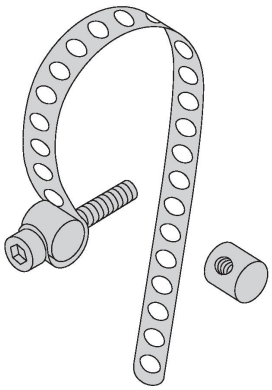

Mounting on round cylinders; cylinder diameter 80…200 mm material: Metal A2 1.4301 (AISI 304); two tie bolts (material: Metal CuZn, alternatively metal A2 1.4301 / AISI 304) cylinder screw M3 x 20; (DIN 912-A20)

BIM-PST-AN6X-V1131| 09/09/2020 16-32 | technical changes reserved