NI10-P18SK-AP6X
Inductive Sensor

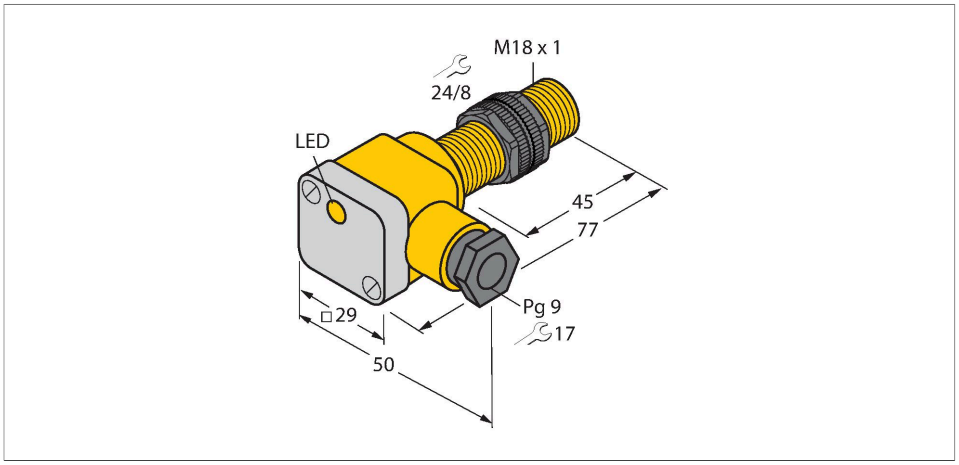

Features

- Threaded barrel, M18 x 1
- Plastic, PA12-GF30-V0
- DC 3-wire, 10…30 VDC
- NO contact, PNP output
- Terminal chamber

Wiring diagram

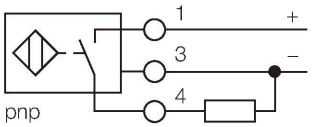

Functional principle

Inductive sensors detect metal objects contactless and wear-free. For this, they use a high-frequency electromagnetic AC field that interacts with the target. Inductive sensors generate this field via an RLC circuit with a ferrite coil.

Technical data

Type	NI10-P18SK-AP6X
Ident. no.	46567
Rated switching distance	10 mm
Mounting conditions	Non-flush
Secured operating distance	≤ (0.81 × Sn) mm
Correction factors	St37 = 1; Al = 0.3; stainless steel = 0.7; Ms = 0.4
Repeat accuracy	≤ 2 % of full scale
Temperature drift	≤ ± 10 %
Hysteresis	3…15 %
Ambient temperature	-25…+70 °C
Operating voltage	10…30 VDC
Residual ripple	≤ 10 % U_{ss}
DC rated operational current	≤ 200 mA
No-load current	≤ 15 mA
Residual current	≤ 0.1 mA
Isolation test voltage	≤ 0.5 kV
Short-circuit protection	yes / Cyclic
Voltage drop at I_e	≤ 1.8 V
Wire breakage/Reverse polarity protection	yes / Complete
Output function	3-wire, NO contact, PNP
Switching frequency	0.5 kHz
Design	Threaded barrel, M18 × 1
Dimensions	77 mm

NI10-P18SK-AP6X| 09/09/2020 16-00 | technical changes reserved

Technical data

Housing material	Plastic, PA12-GF30
Terminal chamber cover material	plastic, Ultem
Terminal chamber housing material	plastic, PA12-GF30
Active area material	Plastic, PA12-GF30
Max. tightening torque housing nut	2 Nm
Electrical connection	Terminal chamber
Clamping ability	≤ 2.5 mm²
Cable external diameter	4.5…8 mm
Vibration resistance	55 Hz (1 mm)
Shock resistance	30 g (11 ms)
Protection class	IP67
MTTF	2283 years acc. to SN 29500 (Ed. 99) 40 °C
Switching state	LED, Yellow
Included in delivery	cable gland; 2x plastic seals

Mounting instructions

Mounting instructions/Description

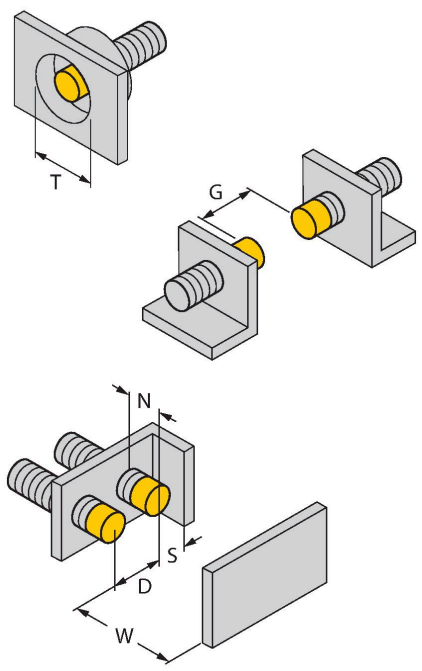

Distance D	3 x B
Distance W	3 x Sn
Distance T	3 x B
Distance S	1.5 x B
Distance G	6 x Sn
Distance N	2 x Sn
Diameter active area B	Ø 18 mm

NI10-P18SK-AP6X| 09/09/2020 16-00 | technical changes reserved

Accessories

QM-18	6945102

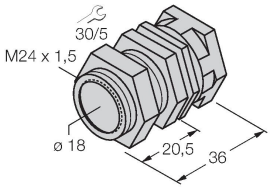

Quick-mount bracket with dead-stop; material: Chrome-plated brass. Male thread M24 × 1.5. Note: The switching distance of the proximity switches may change when using quick-mount brackets.

BST-18B	6947214

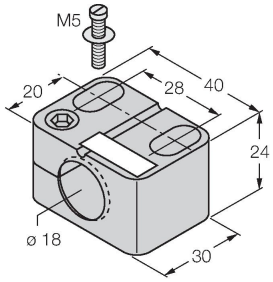

Mounting clamp for threaded barrel sensors, with dead-stop; material: PA6

MW-18	6945004

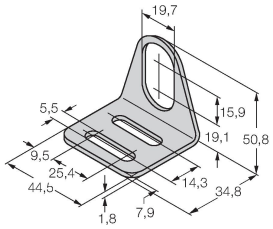

Mounting bracket for threaded barrel sensors; material: Stainless steel A2 1.4301 (AISI 304)

BSS-18	6901320

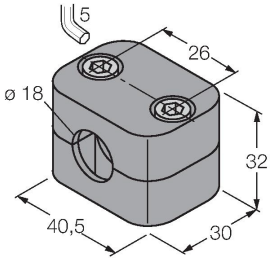

Mounting clamp for smooth and threaded barrel sensors; material: Polypropylene

NI10-P18SK-AP6X| 09/09/2020 16-00 | technical changes reserved