BIM-UNR-AP6X-0.3-PSG3M
Magnetic Field Sensor – For Pneumatic Cylinders

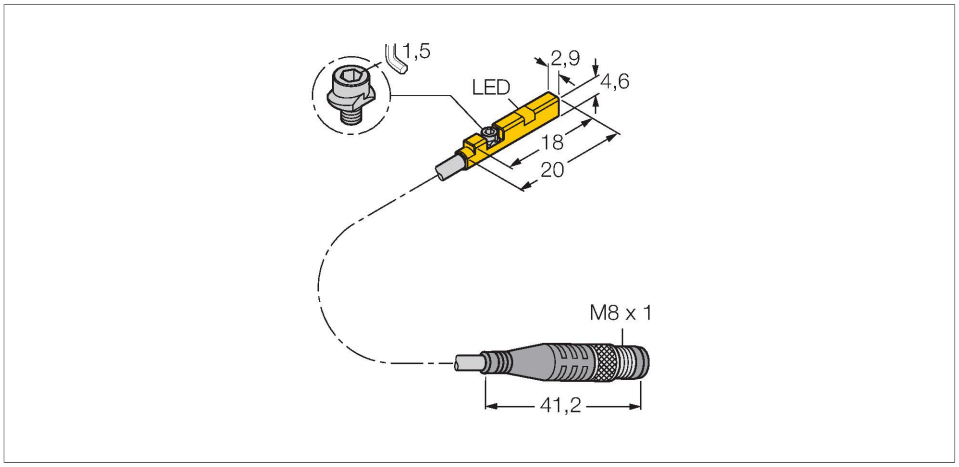



Technical data

Type	BIM-UNR-AP6X-0.3-PSG3M
ID	4685832
General data	
Pass speed	≤ 0.3 m/s
Repeatability	≤ ± 0.3 mm
Temperature drift	≤ 0.3 mm
Hysteresis	≤ 1 mm
Electrical data	
Operating voltage U_B	11…30 VDC
Ripple U_{ss}	≤ 10 % U_{Bmax}
DC rated operating current I_e	≤ 100 mA
No-load current	≤ 15 mA
Residual current	≤ 0.1 mA
Isolation test voltage	0.5 kV
Short-circuit protection	yes/Cyclic
Voltage drop at I_e	≤ 1.8 V
Wire break/reverse polarity protection	yes/Complete
Output function	3-wire, NO contact, PNP
Switching frequency	0.02 kHz
Mechanical data	
Design	Rectangular, UNR
Dimensions	18 x 2.9 x 4.6 mm
Housing material	Plastic, PP
Active area material	Plastic, PP

Features

- For C-groove cylinders without mounting accessories
- Optional accessories for mounting on other cylindrical housings.
- One-hand mounting possible
- Stable mounting
- Magneto-resistive sensor
- DC 3-wire, 11…30 VDC
- NO contact, PNP output
- Pigtail with M8 × 1 male connector

Wiring diagram

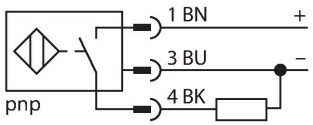

Functional principle

Magnetic field sensors are activated by magnetic fields and are used, in particular, for the detection of the piston position in pneumatic cylinders. As magnetic fields can permeate non-magnetizable metals, they detect a permanent magnet attached to the piston through the aluminium cylinder wall.

BIM-UNR-AP6X-0.3-PSG3M| 05/28/2025 13-18 | technical changes reserved

Technical data

Tightening torque fixing screw	0.2 Nm
Electrical connection	Cable with connector, M8 × 1
Cable quality	Ø 2 mm, Gray, Lif9Y-11Y, PUR, 0.3 m
Core cross-section	3 x 0.08 mm²
Litz wire	40 x0.05 mm
Environmental conditions	
Ambient temperature	-25…+70 °C
Vibration resistance	55 Hz (1 mm)
Shock resistance	30 g (11 ms)
Protection class	IP67
MTTF	2283 years acc. to SN 29500 (Ed. 99) 40 °C
Mounting on the following profiles	
Cylindrical design	◯
Switching state	LED, Yellow
Included in delivery	cable clip

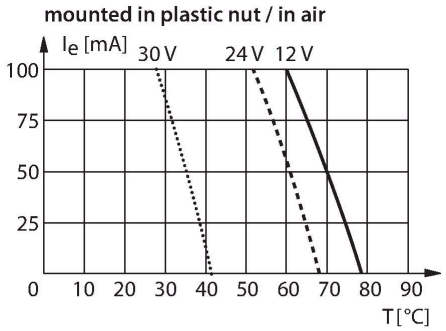

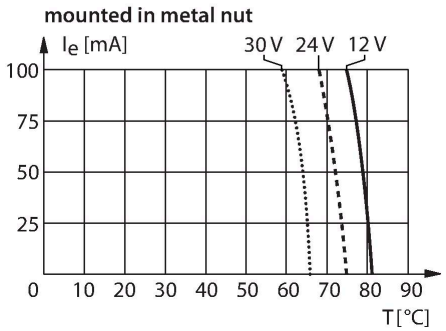

BIM-UNR-AP6X-0.3-PSG3M| 05/28/2025 13-18 | technical changes reserved

Mounting instructions

Mounting instructions/Description

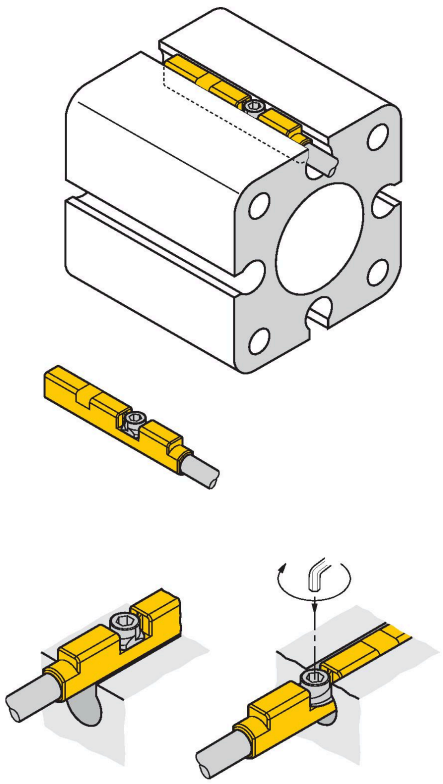

The sensor is mounted in the groove from above. Mount the sensors as follows using the patented wing screw: The wing screw features a left-hand female thread. Two small plastic lips keep the screw in position, ready-to-install. Turn the screw clockwise. The screw moves out of the thread and hits the upper grooves with the wings. The sensor is thus pressed down and locked. Use a 1.5 mm Allen key to fasten the screw with a quarter turn. A fixing torque of 0.2 Nm is sufficient for safe mounting without damaging the cylinder. Cable clips are included in the scope of delivery. They enable smooth cable routing in the groove. Mounting accessories for other cylinder sizes have to be ordered separately.

Accessories

KLR2-UNR	100000596

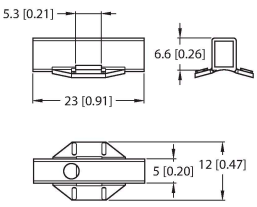

Mounting bracket for mounting magnetic field sensors on round cylinders

ASB-4	6965104

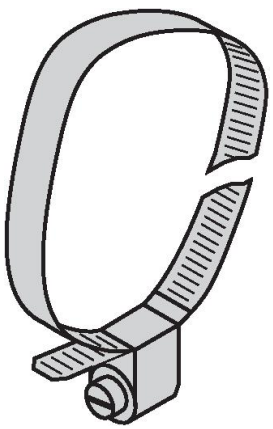

Clip collar for mounting brackets for magnetic field sensors on round cylinders; cylinder diameter: 28… 39 mm; other lengths are available under designations ASB-1 to ASB-9

BIM-UNR-AP6X-0.3-PSG3M| 05/28/2025 13-18 | technical changes reserved