Adapter for Setting up TBEN-S Module Groups
TBNN-S0-STD-01

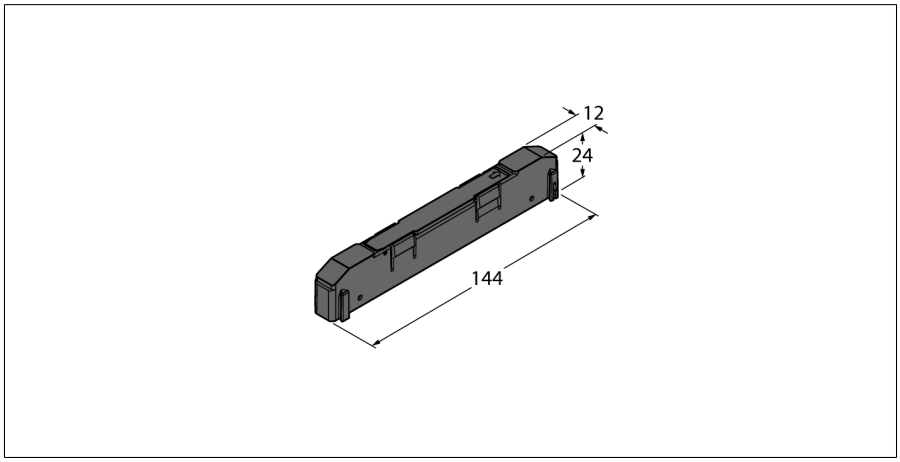

Type	TBNN-S0-STD-01
ID	6814043

General Information	
Ambient temperature	-40…+70 °C
Protection class	IP65 IP67 IP69K
Housing material	PA6-GF30
Housing color	Black
Halogen-free	yes

- 1 piece
- Easy arrangement of TBEN-S modules
- Creation of compact TBEN-S module groups
- Straightforward installation
- Simple compliance with the installation dimensions

Edition • 2024-10-03T22:57:15+02:00