piconet Extension Module for IP-Link
8 Digital Outputs 2 A (12 A in Total)
SNNE-0008D-0004

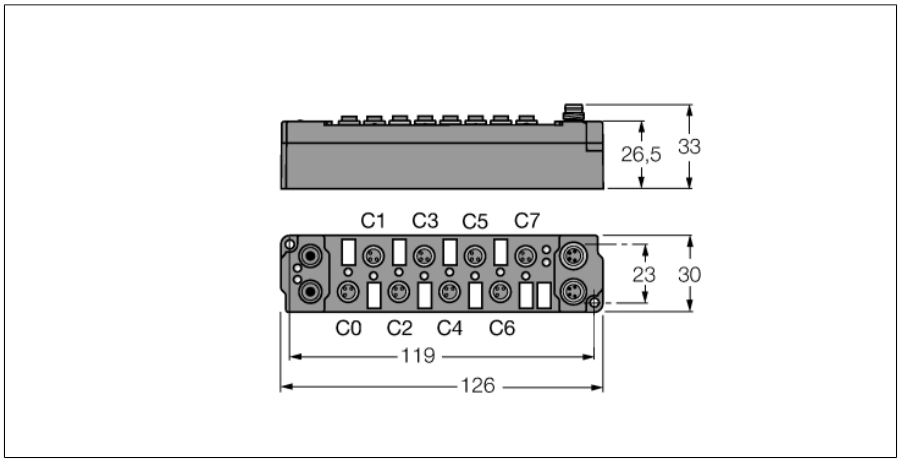

- Direct connection to the IP link
- Fibre-glass reinforced housing
- Encapsulated module electronics
- Metal connector
- Degree of protection IP67

M8 × 1 Output

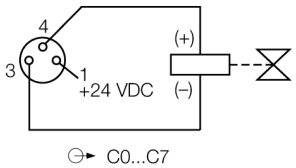

M8 × 1 Power Supply



Type	SNNE-0008D-0004
ID	6824182
Number of channels	8
Operating / load voltage	20…29 VDC
Operating current	≤ 25 mA
Fibre-optic length	≤ 15 m
Number of channels	8 digital outputs acc. to EN 61131-2
Output voltage	20…29 VDC from load voltage
Output current per channel	2 A (Σ 12 A), short-circuit proof
Load type	resistive, inductive, lamp load
Switching frequency	≤ 500 Hz
Simultaneity factor	0.75
Dimensions (W x L x H)	30 x 126 x 26.5 mm
Vibration test	Acc. to EN 60068-2-6
Shock test	acc. to DIN EN 60068-2-27
Electromagnetic compatibility	Acc. to EN 61000-6-2/EN 61000-6-4
Protection class	IP67
Approvals	CE, cULus

Edition • 2025-02-28T15:03:56+01:00

Data in process image

			Bit 7	Bit 6	Bit 5	Bit 4	Bit 3	Bit 2	Bit 1	Bit 0
PROFIBUS-DP coupling module: "Byte alignment" is disabled (default) and byte n has been used halfway. DeviceNet™, CANopen, INTERBUS, Ethernet coupling module: Byte n has been used halfway. Up to 8 bit user data are mapped.	**Output**	**Byte n** (M8)	C3P4	C2P4	C1P4	C0P4	Is used by the physically preceeding bit-oriented extension module connected via the IP Link.			
		Byte n (M12)	C1P2	C1P4	C0P2	C0P4				
		Byte n+1 (M8)	Is used by the physically following bit-oriented extension module connected via the IP Link.				C7P4	C6P4	C5P4	C4P4
		Byte n+1 (M12)					C3P2	C3P4	C2P2	C2P4
PROFIBUS-DP coupling module: "Byte alignment" is disabled (default) and the previous byte has been completely used or "byte alignment" is avtive. DeviceNet™, CANopen, INTERBUS, Ethernet coupling module: The previous byte has been completely used. Up to 8 bit user data are mapped.	**Output**	**Byte n** (M8)	C7P4	C6P4	C5P4	C4P4	C3P4	C2P4	C1P4	C0P4
		Byte n (M12)	C3P2	C3P4	C2P2	C2P4	C1P2	C1P4	C0P2	C0P4
	C... = Connector no. – P... = Pin no.									

Edition • 2025-02-28T15:03:56+01:00