piconet Extension Module for IP-Link Single Channel Serial Interface RS232 SNNE-10S-0002

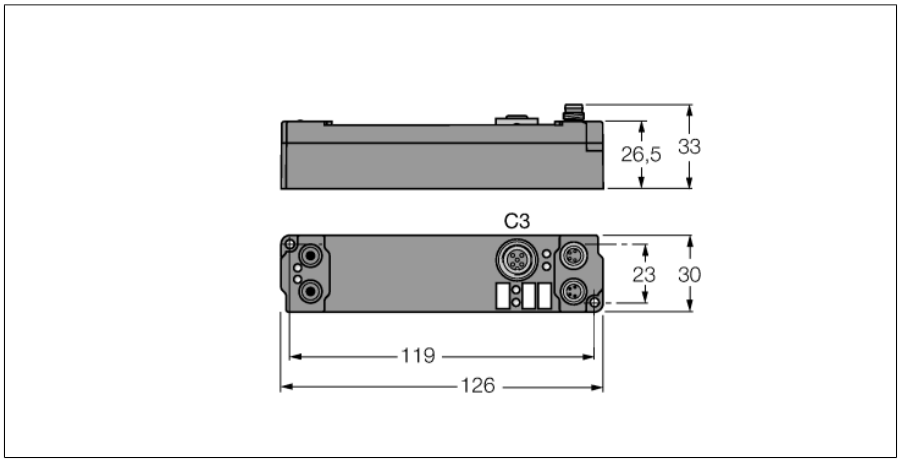

- Serial interface RS232
- 1-channel
- Parameterizable functions
- Supported via I/O-ASSISTANT 2
- Direct connection to the IP link
- Fibre-glass reinforced housing
- Encapsulated module electronics
- Metal connector
- Degree of protection IP67

M12 × 1 Input

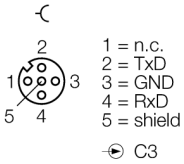

M8 × 1 Power Supply

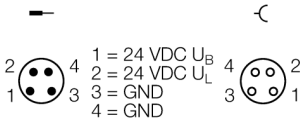

$I_{Bmax} = I_{Lmax} = 4$ A

Type	SNNE-10S-0002
ID	6824211
Operating / load voltage	20…29 VDC
Operating current	≤ 40 mA
Fibre-optic length	≤ 15 m
Bit distortion	≤ 3 %
Transmission rate	1.2 to 19.2 kBit/s (default 9.6 kbps)
RS232 Cable length	≤ 15 m
Signal voltage low level	-18...-3 VDC
High level signal voltage	3...18 VDC
Data buffer	128-byte receive buffer, 16-byte send buffer
Dimensions (W x L x H)	30 x 126 x 26.5 mm
Vibration test	Acc. to EN 60068-2-6
Shock test	acc. to DIN EN 60068-2-27
Electromagnetic compatibility	Acc. to EN 61000-6-2/EN 61000-6-4
Protection class	IP67
Approvals	CE, cULus

Edition • 2025-02-28T15:04:32+01:00

Data in process image

	Address	Input data		Output data	
Pre-conditions	**Word**	**High-Byte**	**Low-Byte**	**High-Byte**	**Low-Byte**
Complex mapping: Data are mapped with control and status byte	**0**	D0	SB	D0	CB
	1	D2	D1	D2	D1
	2	D4	D3	D4	D3

Edition • 2025-02-28T15:04:32+01:00