piconet Extension Module for IP-Link
4 Analog Inputs ±10 V
SNNE-40A-0005

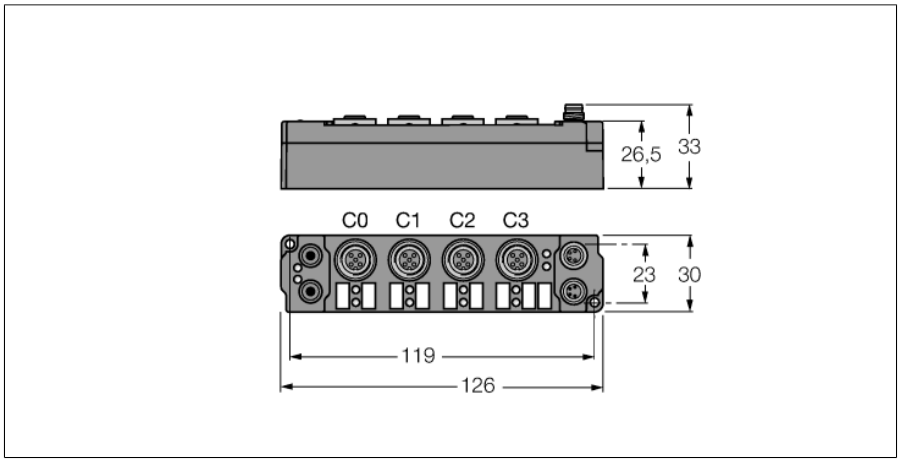

- 4 analog inputs ±10 V
- Direct connection to the IP link
- Fibre-glass reinforced housing
- Encapsulated module electronics
- Metal connector
- Degree of protection IP67

M12 × 1 Input

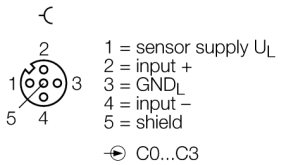

Connection - Inputs

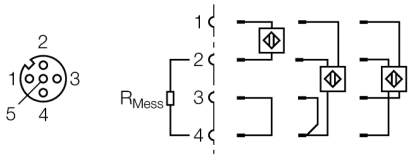

M8 × 1 Power Supply

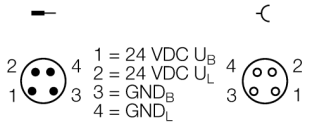

$I_{Bmax} = I_{Lmax} = 4$ A

Type	SNNE-40A-0005
ID	6824216
Number of channels	4
Operating / load voltage	20…29 VDC
Operating current	≤ 55 mA
Fibre-optic length	≤ 15 m
Number of channels	4 analogue inputs ± 10 V
Input resistance	> 100 kΩ
Electrical isolation	channels to operational voltage
Common mode voltage	max. 35 V
Measuring current	0.5 mA
Conversion time	250 ms
Relative measuring error	< ±0.3 % of full scale
Input filter	variable
Sensor supply	from load voltage
Dimensions (W x L x H)	30 x 126 x 26.5 mm
Vibration test	Acc. to EN 60068-2-6
Shock test	acc. to DIN EN 60068-2-27
Electromagnetic compatibility	Acc. to EN 61000-6-2/EN 61000-6-4
Protection class	IP67
Approvals	CE, cULus

Edition • 2025-02-28T15:04:41+01:00

LEDs

	LED designation	Status green	Status red	Function
IP-Link / module status	RUN / ERR (I/O)	flickers/ON	OFF	Receiving error-free IP-Link protocols
		flickers	flickers	Receiving faulty IP-Link protocols
		OFF	flickers	Receiving faulty IP-Link protocols / system fault
		OFF	ON	No receipt of IP-Link protocols / module error
Inputs	R / E (1...4)	OFF		No data transmission
		ON		Data transmission to D/A converter
			OFF	Error-free data transmission
			ON	Wire break, measured value out of measuring range, etc.
Power supply	U_B	OFF		Operating voltage UB < 18 VDC
		ON		Operating voltage $U_B \geq 18$ VDC
	U_L	OFF		Load voltage $U_L < 18$ VDC
		ON		Load voltage $U_L \geq 18$ VDC

Data in process image

Valid for the setting "Motorola format"

SBn: Status byte channel n
CBn: Control byte channel n
Chn D0: channel n, least significant data byte
Chn D1: channel n, most significant data byte

	Address	Input data		Output data	
Pre-conditions	**Word**	**High-Byte**	**Low-Byte**	**High-Byte**	**Low-Byte**
Compact mapping: Starting with Ch0 D1 in "Low-Byte" word 0 all other bytes follow immediately. Only the user data are mapped (greyed in the table). **Complex mapping:** Data are mapped with control and status byte.	**0**	Ch0 D1	SB0	Ch0 D1	CB0
	1	SB1	Ch0 D0	CB1	Ch0 D0
	2	Ch1 D0	Ch1 D1	Ch1 D0	Ch1 D1
	3	Ch2 D1	SB2	Ch2 D1	CB2
	4	SB3	Ch2 D0	CB3	Ch2 D0
	5	Ch3 D0	Ch3 D1	Ch3 D0	Ch3 D1

Edition • 2025-02-28T15:04:41+01:00