BL20 base module
Screw connection
BL20-P3S-SBB

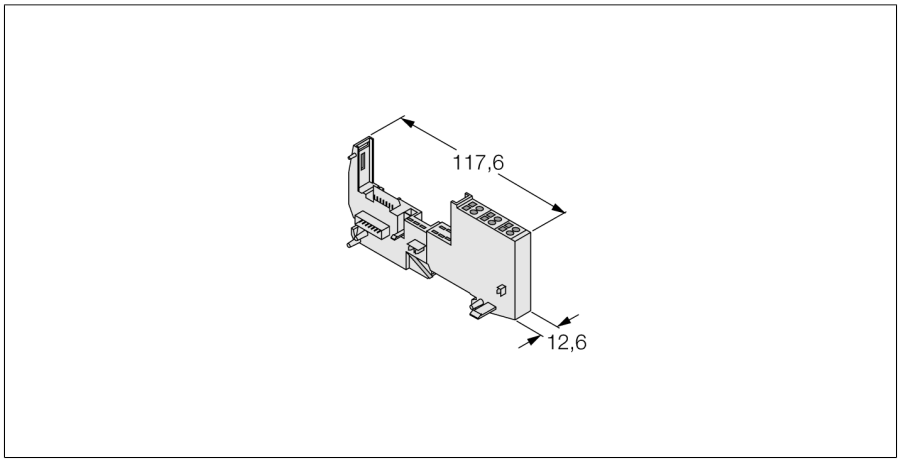

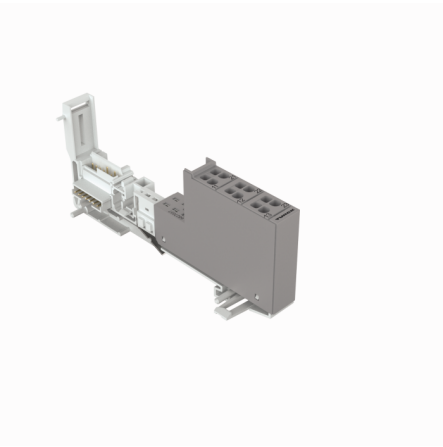

ID	6827037
Dimensions (W x L x H)	12.6 x 117.6 x 49.9 mm
Approvals	CE, cULus, zone 2, Class I, Div. 2
Protection class	IP20

- Passive connection components for sensors and actuators
- Quick replacement of electronics in wired state
- Mechanical coding prevents plugging of wrong electronic module
- Protection class IP20
- Screw connection
- Disc design

Edition • Rev. A • 2026-01-27T21:26:38+01:00