BL20 base module
Tension spring connection
BL20-S3T-SBC

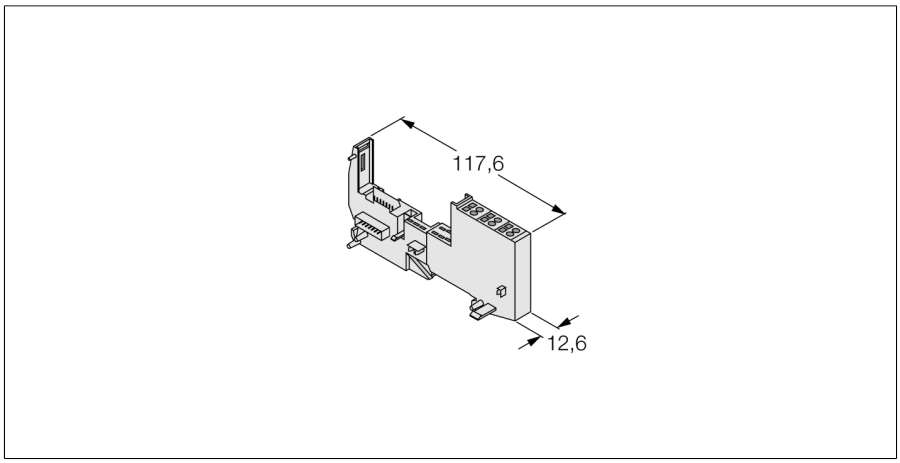

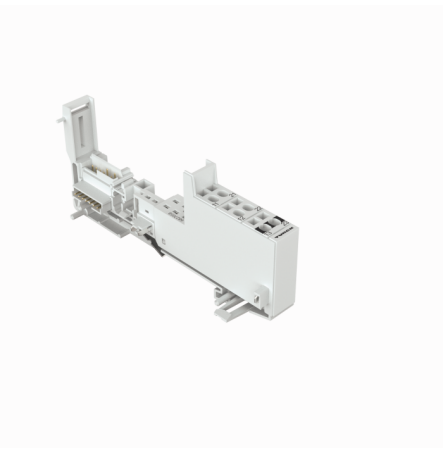

ID	6827058
Dimensions (W x L x H)	12.6 x 117.6 x 49.9 mm
Approvals	CE, cULus, zone 2, Class I, Div. 2
Protection class	IP20

- Passive connection components for sensors and actuators
- Quick replacement of electronics in wired state
- Mechanical coding prevents plugging of wrong electronic module
- Protection class IP20
- Tension spring connection
- Disc design
- Access to C rail

Edition • 2026-01-27T21:27:09+01:00