BL20 base module
Screw connection
BL20-S6S-SBCSBC

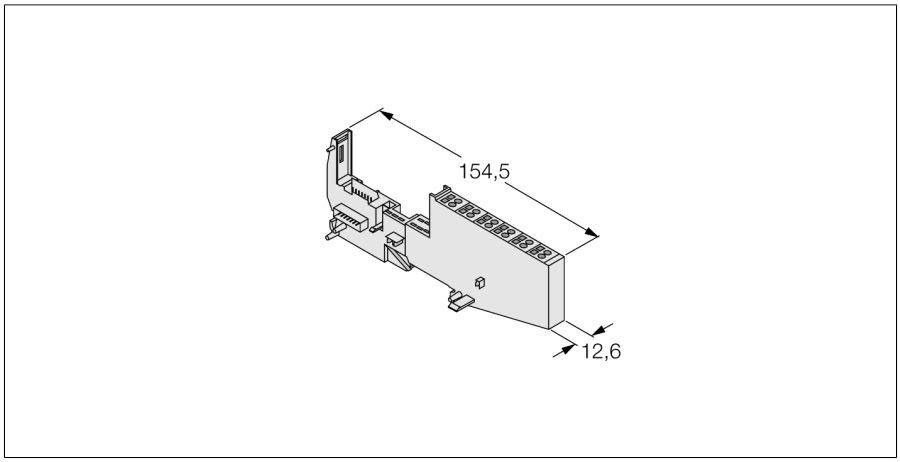

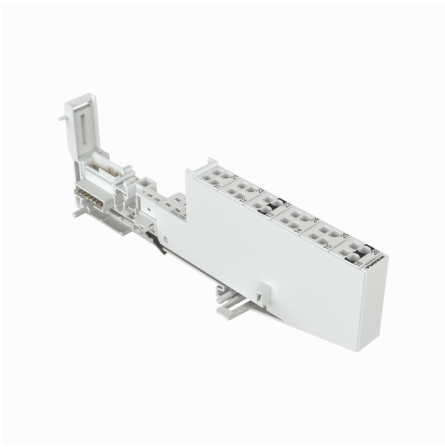

ID	6827066
Dimensions (W x L x H)	12.6 x 154.5 x 49.9 mm
Approvals	CE, cULus, zone 2, Class I, Div. 2
Protection class	IP20

- Passive connection components for sensors and actuators
- Quick replacement of electronics in wired state
- Mechanical coding prevents plugging of wrong electronic module
- Protection class IP20
- Screw connection
- Disc design
- Access to C rail

Edition • Rev. B • 2026-01-27T21:27:21+01:00