BL20 base module
Screw connection
BL20-B6S-SBBSBB

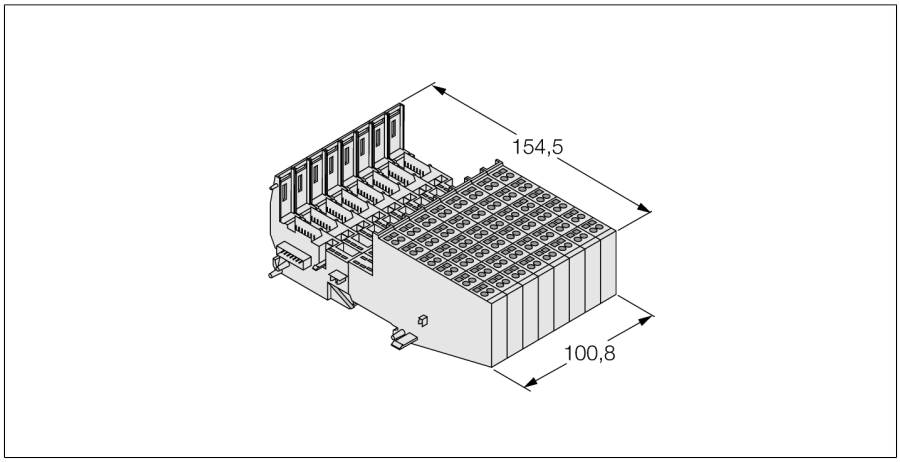

- Passive connection components for sensors and actuators
- Quick replacement of electronics in wired state
- Mechanical coding prevents plugging of wrong electronic module
- Protection class IP20
- Screw connection
- Block design

ID	6827067

Dimensions (W x L x H)	100.8 x 154.5 x 49.9 mm
Approvals	CE, cULus, zone 2, Class I, Div. 2
Protection class	IP20

Edition • 2026-01-27T21:27:22+01:00