Gateway for BL67 I/O system
Multiprotocol interface for Ethernet
BL67-GW-EN-4F

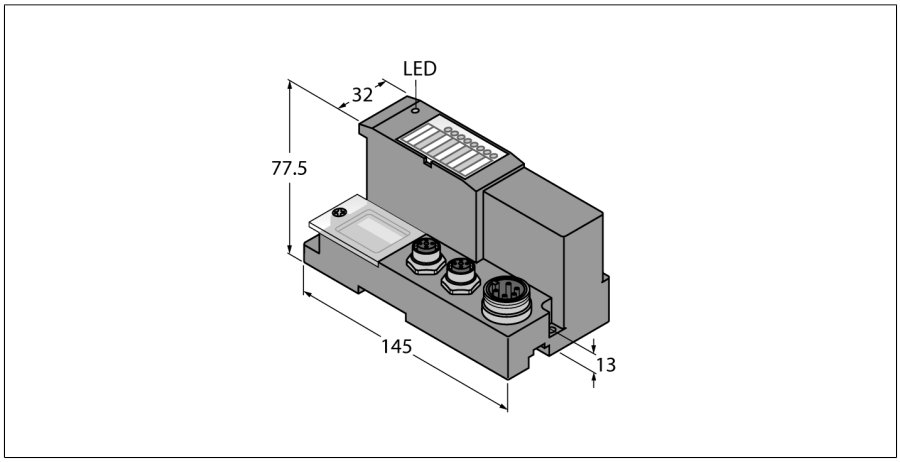



ID	6827392
Supply voltage	24 VDC
Admissible range	18…30 VDC
Nominal current from module bus	≤ 600 mA
max. system supply current $I_{mb\ (5V)}$	1.3A
Max. sensor supply I_{sens}	4 A electronically limited current supply
max. load current I_o	10 A
Voltage supply connection	7/8″, 4-pin
System data	
Max. number of I/O modules	32
Transmission rate	10/100 Mbps; Full/Half Duplex; Auto Negotiation; Auto Crossing
Connection technology Ethernet	2 × M12 × 1 female connector, 4-pin, D-coded
Protocol detection	automatic
Web server	192.168.1.254 (Default)
Service interface	Mini USB, Ethernet
Modbus TCP	
Addressing	Static IP, DHCP
Supported function codes	FC1, FC2, FC3, FC4, FC5, FC6, FC15, FC16, FC23
Number of TCP connections	6
Input register start address	0 (0x0000 hex)
Output register start address	2048 (0x0800 hex)
Ethernet/IP	
Addressing	acc. to EtherNet/IP specification
Quick Connect (QC)	< 150 ms
Device Level Ring (DLR)	supported
Class 1 connections (CIP)	6

- 3 decimal rotary coding switches
- Protection class IP67
- LEDs for display of supply voltage, group and bus errors
- Multiprotocol interface between the BL67 system and the Ethernet protocols Modbus TCP, EtherNet/IP™ and PROFINET
- PROFINET supports fast start-up (FSU)
- EtherNet/IP™ supports QuickConnect (QC)
- Integrated switch 10/100 Mbps
- Two 4-pin M12 connectors D-coded for fieldbus connection
- One 7/8" male connector, 4-pin, for power supply

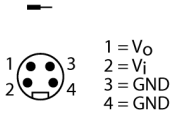

Functional principle

BL67 gateways are the head component of a BL67 station. They are designed to connect the modular fieldbus nodes to the higher-level fieldbus (PROFIBUS-DP, DeviceNet, CANopen, Ethernet Modbus TCP, PROFINET, EtherCAT or EtherNet/IP).

All BL67 electronic modules communicate via the internal module bus, the data of which is transferred to the fieldbus via the gateway. All I/O modules can thus be configured independently of the bus system.

Edition • 2026-01-27T21:27:29+01:00

PROFINET	
Addressing	DCP
Conformance class	B (RT)
MinCycleTime	1 ms
Fast Start-Up (FSU)	< 150 ms
Diagnostics	acc. to PROFINET alarm handling
Topology detection	supported
Automatic addressing	supported
Media Redundancy Protocol (MRP)	supported

Dimensions (W x L x H)	74 x 145 x 77.5 mm
Ambient temperature	-40…+70 °C
Temperature derating	
> 55 °C Circulating air (Ventilation)	no limitation
> 55 °C Steady ambient air	Isens < 3A, Imb < 1A
Storage temperature	-40…+85 °C
Relative humidity	5…95 % (internal), level RH-2, no condensation (when stored at 45 °C)
Vibration test	Acc. to EN 61131
Extended vibration resistance	VN 02-00 and higher
- up to 5 g (at 10 to 150 Hz)	for mounting on DIN rail no drilling according to EN 60715, with end bracket
- up to 20 g (at 10 up to 150 Hz)	for mounting on base plate or machinery Therefore every second module has to be mounted with two screws each.
Shock test	Acc. to IEC 60068-2-27
Drop and topple	acc. to IEC 68-2-31 and free fall to IEC 68-2-32
Electromagnetic compatibility	Acc. to EN 61131-2
Protection class	IP67
DIN rail mounting	yes, Attention: Offset
Direct mounting	Two mounting holes, Ø 6 mm

Included in delivery	1 x end plate BL67

Edition • 2026-01-27T21:27:29+01:00

Pin assignment and supply concept

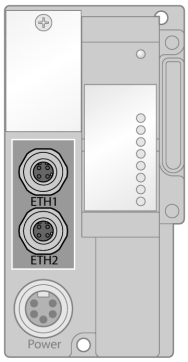	**Ethernet Ports** Starting from version VN 03-00, the gateway features two D-coded M12 Ethernet ports with integrated switch. The ports are used as interfaces for configuration and fieldbus communication. The gateway supports the EtherNet/IP™ and Modbus TCP protocols	Pin Assignment 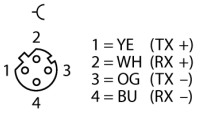
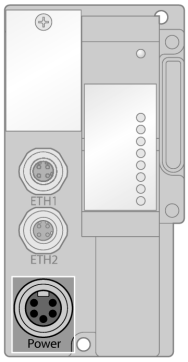	**Power Supply** Double-tuned power supply of the BL67 system. System power supply V_i V_i is for the internal system supply at the backplane bus($V_{MB(5V)}$) and for the 4A short-circuit limited sensor supply (V_{sens}). Load voltage V_o V_o for output supply, limited to max.10A.	Pin Assignment 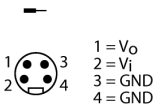

Edition • 2026-01-27T21:27:29+01:00