# PT016R-29-LI3-H1140
# Pressure Transmitter, Front-Flush – With Current Output (2-Wire)

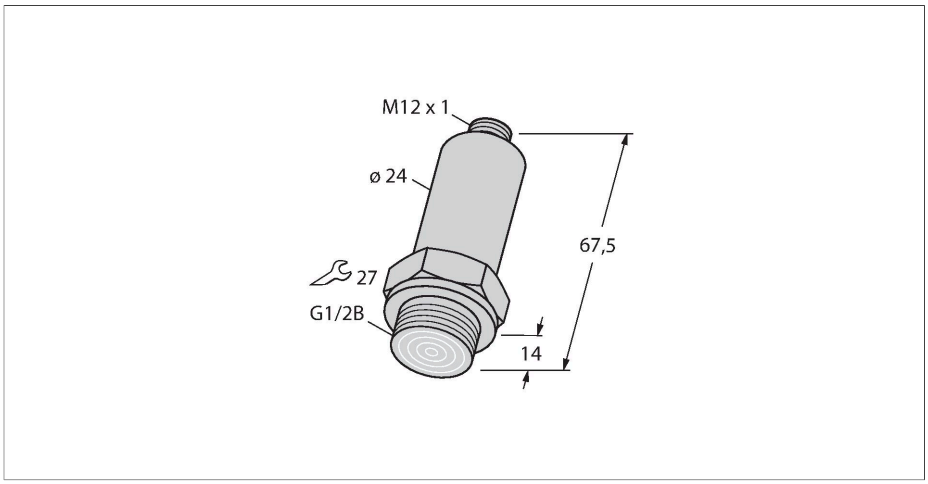


## Features

- Compact and robust design
- Pressure connection with front-flush mounted stainless steel diaphragm
- Accuracy hardly affected by temperature within entire range
- Excellent EMC properties
- Pressure range 0…16 bar rel.

## Wiring diagram

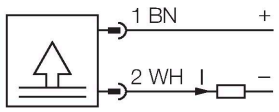


## Technical data

| | |
|---|---|
| Type | PT016R-29-LI3-H1140 |
| Ident. no. | 6831555 |
| **Pressure range** | |
| Relative pressure | 0…16 bar rel. |
| | 0…232.1 psi |
| | 0…1.6 MPa |
| Admissible overpressure | ≤ 40 bar |
| Burst pressure | ≥ 120 bar |
| Response time | 1 ms |
| **Power supply** | |
| Operating voltage | 9…30 VDC |
| Current consumption | ≤ 4 mA |
| Protective measure | SELV according to EN 50178 |
| Short-circuit/reverse polarity protection | yes / yes |
| Protection type and class | IP67 / III |
| **Outputs** | |
| Output 1 | Analog output |
| Output function | Analog output current |
| **Analog output** | |
| Current output | 4…20 mA |
| Load | ≤ 1.2 kΩ |
| Accuracy LHR | ± 0.5 % FS BSL |

## Functional principle

The pressure sensors of the PT …-2 series operate with a thin-film measuring cell. The thin-film sensor is welded directly to the pressure connection, just like the housing. The processed signal is made available as analog output of 4…20 mA (2-wire).

PT016R-29-LI3-H1140| 09/24/2020 00-56 | technical changes reserved

## Technical data

| | |
|---|---|
| **Temperature behaviour** | |
| Medium temperature | -25…+85 °C |
| Temperature coefficient zero point Tk0 | ± 0.3 % of full scale/10 K |
| Temperature coefficient span $T_{kS}$ | ± 0.3 % of full scale/10 K |
| **Ambient conditions** | |
| Ambient temperature | -25…+85 °C |
| Storage temperature | -25…+85 °C |
| Vibration resistance | 3 x g (5-500-5 Hz, 10 cycles per axis, 1 oct/min), acc. to IEC 68-2-6 |
| Shock resistance | 30 g (11 ms) , acc. to IEC 68-2-27 |
| **Housing** | |
| Housing material | Stainless steel, 1.4435 (AISI 316L) |
| Pressure connection material | Stainless steel 1.4435 (AISI 316L) |
| Pressure transducer material | Stainless steel 1.4548 (AISI 630) |
| Process connection | G 1/2" front-flush |
| Wrench size pressure connection / coupling nut | SW27 |
| Electrical connection | Connector, M12 × 1 |
| **Reference conditions acc. to IEC 61298-1** | |
| Temperature | 15…+25 °C |
| Atmospheric pressure | 860…1060 hPa abs. |
| Humidity | 45…75 % rel. |
| Auxiliary power | 24 VDC |
| MTTF | acc. to SN 29500 (Ed. 99) 40 °C |

PT016R-29-LI3-H1140| 09/24/2020 00-56 | technical changes reserved