PT400R-29-LI3-H1140
Pressure Transmitter, Front-Flush – With Current Output (2-Wire)

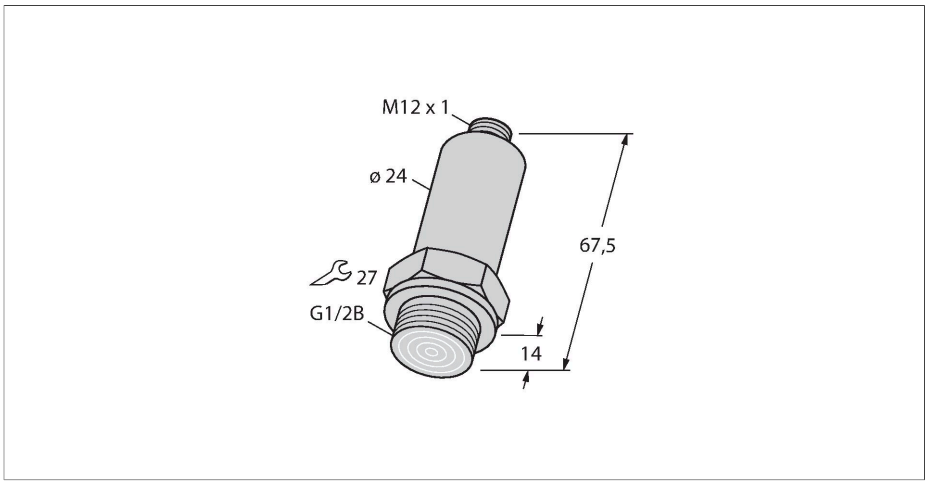

Features

- Compact and robust design
- Pressure connection with front-flush mounted stainless steel diaphragm
- Accuracy hardly affected by temperature within entire range
- Excellent EMC properties
- Pressure range 0…400 bar rel.

Wiring diagram

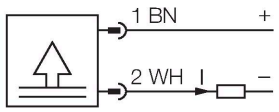

Technical data

Type	PT400R-29-LI3-H1140
Ident. no.	6831562
Pressure range	
Relative pressure	0…400 bar rel.
	0…5802 psi
	0…40 MPa
Admissible overpressure	≤ 600 bar
Burst pressure	≥ 1200 bar
Response time	1 ms
Power supply	
Operating voltage	9…30 VDC
Current consumption	≤ 4 mA
Protective measure	SELV according to EN 50178
Short-circuit/reverse polarity protection	yes / yes
Protection type and class	IP67 / III
Outputs	
Output 1	Analog output
Output function	Analog output current
Analog output	
Current output	4…20 mA
Load	≤ 1.2 kΩ
Accuracy LHR	± 0.5 % FS BSL

Functional principle

The pressure sensors of the PT …-2 series operate with a thin-film measuring cell. The thin-film sensor is welded directly to the pressure connection, just like the housing. The processed signal is made available as analog output of 4…20 mA (2-wire).

PT400R-29-LI3-H1140| 09/24/2020 00-57 | technical changes reserved

Technical data

Temperature behaviour	
Medium temperature	-25…+85 °C
Temperature coefficient zero point Tk0	± 0.3 % of full scale/10 K
Temperature coefficient span T_{kS}	± 0.3 % of full scale/10 K
Ambient conditions	
Ambient temperature	-25…+85 °C
Storage temperature	-25…+85 °C
Vibration resistance	3 x g (5-500-5 Hz, 10 cycles per axis, 1 oct/min), acc. to IEC 68-2-6
Shock resistance	30 g (11 ms) , acc. to IEC 68-2-27
Housing	
Housing material	Stainless steel, 1.4435 (AISI 316L)
Pressure connection material	Stainless steel 1.4435 (AISI 316L)
Pressure transducer material	Stainless steel 1.4548 (AISI 630)
Process connection	G 1/2" front-flush
Wrench size pressure connection / coupling nut	SW27
Electrical connection	Connector, M12 × 1
Reference conditions acc. to IEC 61298-1	
Temperature	15…+25 °C
Atmospheric pressure	860…1060 hPa abs.
Humidity	45…75 % rel.
Auxiliary power	24 VDC
MTTF	acc. to SN 29500 (Ed. 99) 40 °C

PT400R-29-LI3-H1140| 09/24/2020 00-57 | technical changes reserved